OMNIA UE 3.2

UNITÉS EXTÉRIEURES POUR POMPES À CHALEUR RÉVERSIBLES
BUITENUNITS VOOR OMKEERBARE WARMTEPOMPEN
JEDNOSTKI ZEWNĘTRZNE DO REWERSYJNYCH POMP CIEPŁA
UNITĂȚI EXTERIOARE PENTRU POMPE DE CĂLDURĂ REVERSIBILE

Cod. 3QE46800 - Rev. 0 - /2021

FR MANUEL D'INSTALLATION ET D'UTILISATION

NL INSTALLATIE-EN GEBRUIKERSHANDLEIDING

PL ,1675.&0217$2,%&*;

RO 0$18$(167$$87/$$

CUPRINS

1 2165[$59,16&85$$ 02

2 ACCESORII 05

- $FHVRULLQWHFDUQHD 05

3 Ì1$7,167$5(........ 05

4 1,250(6,3257$7$(6591,($78/5,2& 05

5 2&1,67$5(........ 07

- 6HOHFWDUHDORXXOHOHUHFL 08
- 3UHJDWLUHDPDWDVRUHOHL 08

6 35(&$167$5(........ 09

- HQX 09
- &XUHQSDWLODUH 09
-]RRERDVFXJHUH 10
- &XUQSUDVPDSDXUHQSDWLODUH 10

7 ,167580&,81,&8$5(7 11

- &HDSHHQE 11
- HWFDUHDVFXJHUDOH 12
-]DHWHUE 12
- MHWDGHVFDFWDUH ....
- ÌQSUDDQGDVDXDSDDHQW ....
- 7HVWDUHDHWDHQW ....
- XMDUHDDHUXEXURDQG ....
- &DQWDHSDHDSHEDSDXDW ....

8 &8171(5,5($ 15

- 3HFDEXUXLHODOFUUHDVRUHFDEXRUHOHFWEH 15
- 3HFDEXUXLHODFDEXOHRDOEHWDUH 15
- &XUQSUVDSWDVDUDQ 16
- 6FRDWHUHDFDSDFXOXLGHSXELX 16
- 3HQWUXDUHDOQDOUDWXUHXUH 17

9 35,95,(6896835817, ... 17

- HQUHDQV 17
- XSFRQOHFWRQ 18
- 8QDWHaN: 20
- 8QDDWHaN: 22

10 76758355, ... 25

11 35&Ì&&55(78852& 25

12 35&&5&7 26

13 8121535250$ 28

- FKDHQSUWFH 28
- HVSUHQHUXSHUHDDOHQEHQUH 28
- &SDFDWHQOUH 28
- &DSUWFHDFRUHVRXX 28
- 2SHUDUHDQSUFUHQOUH 28
- &UDFWLWDOHQQQSQOUH 28
- HYDUHDQXQQSQOUH 28
- &HURUH 29

14 63&&& .....

15 1250$59,(6595$ .....

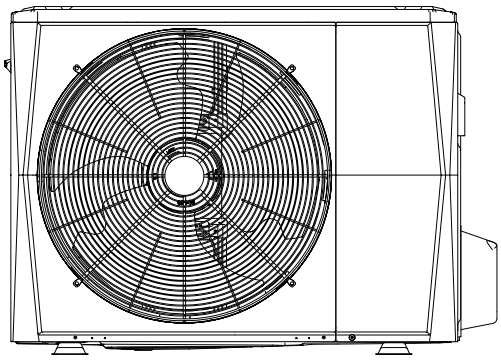

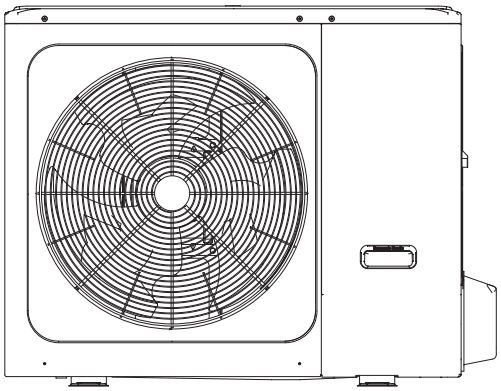

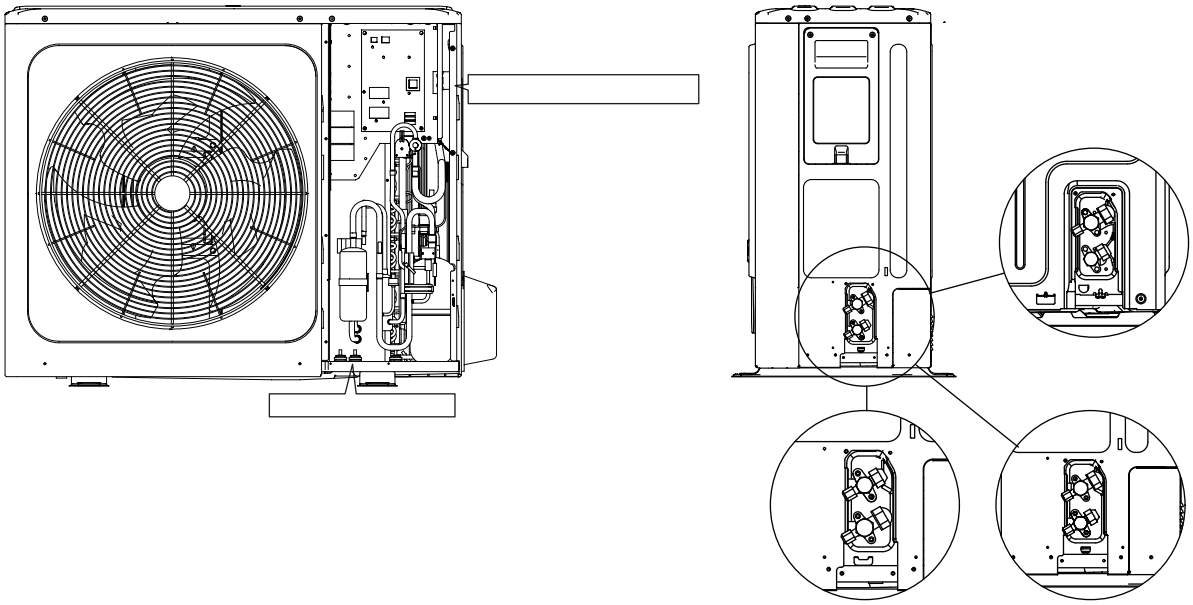

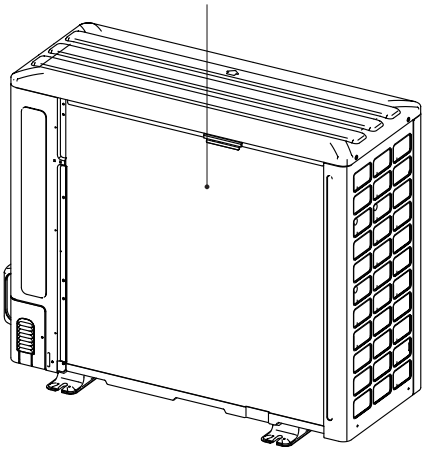

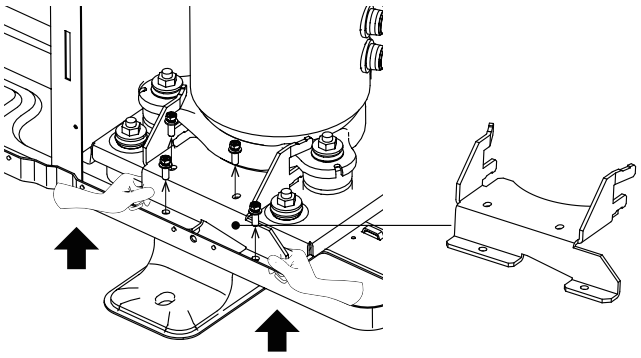

-

[illegible]

[illegible]

[illegible]

[illegible]

[illegible]

[illegible]

[illegible]

[illegible]

[illegible]

[illegible]

[illegible]

[illegible]

[illegible]

[illegible]

[illegible]

[illegible]

[illegible]

	[illegible]	[illegible]
	[illegible]	[illegible]
	[illegible]	[illegible]
	[illegible]	[illegible]
	[illegible]	[illegible]

⚠

⚠

⚠

- 1RWDODEOH&RQWDLQHUORRN

  8QHL&RPHDGRHQUDOSOXMUJUHFXOHVDXSRQQOHQODVEWHSRWUHDVH
  SRWSUQVDFRHODVFXHUHDDSHL

  8QVRQUHHD]HFRQFRUDFRVXOXE8QFRUUHDFRWOHGFXXDXSHVHOH
  OSWSRWSURDVFXHUHDHQRE

  8QHL&RDMHFDUHHRHOHFWURQRVW8QOHHOHFWURQRVHRWUWEDVWFRQL
  SRURDGHFDUHDHFXDFRQX

  8QVHSWFXHD]HQDDEDHRQEUHGFDUERDXOEHUQDDEDHVXXSHQWQHUVDQ
  VRQXDWWXVDQDDEDHRDWWFRUDGWRQRVHDVDXHQHVWRXHD]H
  SRURDQHQ

  8QDHUXFRQOXUGHWVDUHFRUQSURHUHDRHDQX

  8QWQDDFWDD]RUWFRUQEUL

  &QXHVDQ

  &RQVRUH]QHSRFDVDXOFDOQ

- &HVTDSDUDSRWWXFFRQEXVDSRQFXDSDFDHVHRDOHVDX
  FDOH UHXHVDXOVWHH&HSHUHFRGFVXSUDWWDDWVDXVHFRUQWXRQ
  XDUH DXRQ&RUVXQOH&HSHUOEDWXRHXVVHMRFHFXWD
  XDUHDQHQUHDGFWXDWXHXHHFXWFXRQEVHQVXSUDWUL

&RWHXVHVXSUDWXDGHQXRHMXDFXSDUDX

&DXQDUHDEOXGDDHVXSUXXXHHXSDOHQVHDWWQ
VHUXHVDXRHUVHQDOEDWD

&(1&$&$5,&XUXDDHVXUXXXHHXSDOHQVHDWWQ
FQHFDUHDDFHVWXHXVHSDUXXHQXDDWQSHFO1&XUXDDSDUDWHOHFWEHFDHHXXSDOH
XDFDWXFQHFDUHVHSDUXXDWDXDDORDOSHQXXDHVSUHVWHOHHFQHFDUH
XSRQOH DF DSDUDWOH HOHFWEH VXUXDWOD UHVDXHSXWHXXXXHQ SWFXH VXVDQ
SHUEXRVHQSHHXXXDXXXXXX

&RDEODUHDWHXVHHHFXXXXHQUVXXXDWFXHDHRDXDOHHXFDEODUH
DFHDVWFXHFXDEODMXDXXXDWFXRHOHQOHVHXXXHXDXHSDUDW
FXXEDUHDUHXXQVHSDUDUHHFHOSXXXSXHQFXHQHO5&
HDOXDDR

&DVXDDQ&XXDODUH SHUHLSDUXHOHWDEVHQ SHUEQHOH DVFXH FRU LDS
HOHFWEDWDDQXFDEODUHSXUHDFXOH

&QXXDODUHMUEDHFVXVDXDOEDUDWXXXSOEWFHUEQHOHDDWEHOHFWEHD
XOXXUHDEDVFXHUVDFEQHFWESHDFWUXXXFDFXXSOEW
FHUEQHOHDDWEHOHFWEHDSUXXXDODUHDSUXXXVWUVSQDUHHUH

&DDODUHDEXXDSDUDWXHDHUFXXHQDDODWXXHFXEUXHVDUFQOVXVHH
DOHDUHWDWHXUEHFDEXWXHDVDEODWQFHHDDDOEDWDW

- 8XXWHXVHDWUFHVWQ FHVDUOXXWXHFXXDUH

$FHVRULLOM		
1XPH	)RUP	Cantitate
0DQXDOXOGHLQVWDODUHL XWLOL]DUHDOXQLWLL H[WHULRDUHDFHDVWDXQLWDWH		1
0DQXDOXOSHQWUXWHKQLFLDQ		1
6DPEOXFRQHFWRU SHQWUXFRQGHQVDW SHQWUXDSHL		1
(WLFKHWHQHUJLH		1

Ì1$7(167$$(

- ÌQDLQWHGHLQVWDODUH
  QXPHOHPRGHOXOXLVHULDOQ
- 0DQLSXODUH

0DQHYUDUHDDSDUDWXOXLWUHEXLHIăFXWăFXDMXWRUXOXQHDSăUăULOHSUDOHFXPHOHQFHODOWSHQWUX
SUHYHQLUHDSUHUHDFXUHOHPHQW

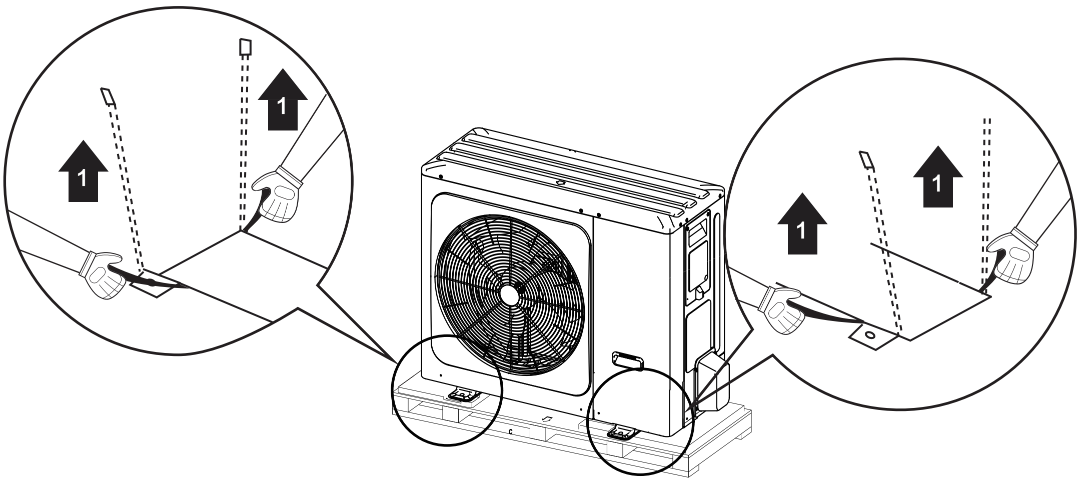

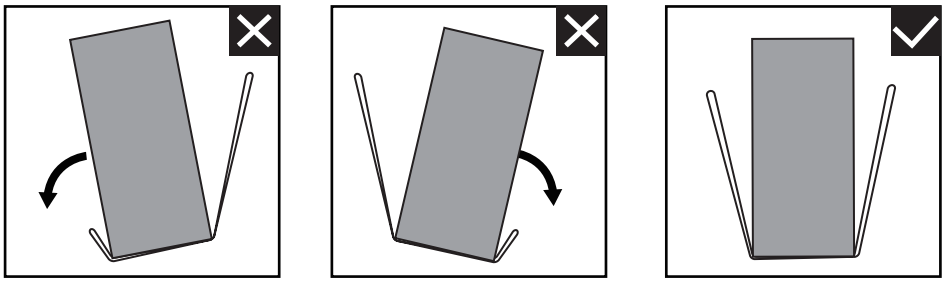

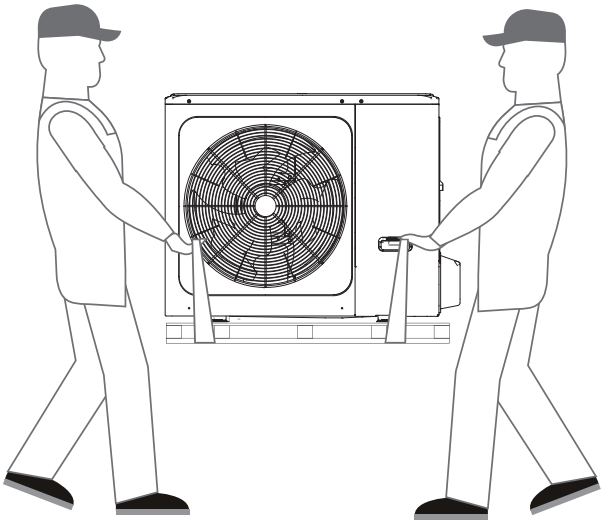

0BO		
		$_2$HFXOHQW
N:		
N:		
N:		
N:		

0RGHO		
		2HFRQOHQ
NH]DW		
NH]DW		
NH]DW		
NWDDW		
NWDDW		
NWDDW		

⚠ 1121(

-)UHFHQXHUHUDEHVFKDGLJXQJHQ

  (LQEDXHQOHFDUHFKHUHQ]HQ]XODVVHQ]XVDPPHQZHUHQ
  FDUHVHHKDWWHQ
  VHLVSXHHUEUDEHVFKDGL

  EHQDUHFKH]HQ]XODVVHQ]XVDPPHQZHUHQ]HOHQ 2VDXHUU
  DEHQHFKOHQ 2FHOSQDLFDUHOQ]HQVWDQODUWHQ]XVDPPHQ
  VFKHUHQHFHOSQDLFDUHHOQ

  EUHVHUVRHHUHDWWHDXWDQ]DFQDODUHQHUHDQHUHD

/2&/1167$$(

⚠ 9256(1

#HDWWHQDEHFDWWHQWHQ]XHHDXDUHQDDSWHQDQOHHQOHHFDUHDQ
SHVHOHHOHFWHSRUHQDHHQ]HOHQVVWH]HFKDQQXQ

- 6HOHFWDQRHQDODUHQDUHQXHUHOHFHQWFKDUHDSURDUHDFOHQX

  /RXEHQDW

  /RXDUHQHDWDQUDQDHD]HFQ

  /RXVHFDUHSWHDDWHDEUDDHHQDWSHQDODQDQ

  /RXDUHQVRHDWHDHD]QDHDHDVXFKHUSUH

  (LQEDXHQVHVQDW]QHWUSQOHO]X

  /RXOHDUHVDXHHVHUWHSHWEDXDW

  /RXDUHOHQDFHWOHDFDEOXHHQVHDGHDW]QOHOHDH

  /RXDUHVFKHUDHHSHQHWHUDDHODVDHQHH[HOHQ]XEHWH
  VFKHUEORDW

  /RXDUHSOHDSHWHWHHFHRED

  1DODWHQDQHQRHWDHVHDFVSHOFKUH]XOFUUHHFWHHH[HQ]UHHWH
  VHFUHHD]XUDWHWHHDFHUW

  1HH]HFWVDXHWHEHQDWSODFDVHUU

  1HH]XFDQQHEUHSHW

  $XDEVHXWHEHWHUSUHDHQ]XVFKUHHDH]XHEEHWFKDHL
  UHDHWDHORDOHSOEDEH

  DFHWHUUHWUHXHD]HQDOUSUHHDHVDH]XHHFHQWHUHQ
  DFHVHSHWUHH]XHQDOUSUHHDHVHUHFHQWUHDQDOUHWHUUHHSXH
  GHFHUQ

- HDOHWDQRHQXHRHSXODHWUHDFHUHHHHUHWUHHDUHDVSHW

- 9HUVHFDHHWUHFDUHVHVUHHHDHDHUHWSURDVFHWHWDVUDUHDDHUHH
  UHHDUHDUDFHVDUXHWHDHUHHFHHF

  HWUHDUHDFDSDFHUHDOH

  $FHOHUDUHDHUHHDHHHUHDDHHOJH

  ]HUXHUHDHHHDSUHVHUHDUHDW

  $HUHDHH

  HWUHEDHHHSDUHDDHHDHSHUHHSHVVHUHDVFHUHUHUHSHH
  SH FHHHHFHD]

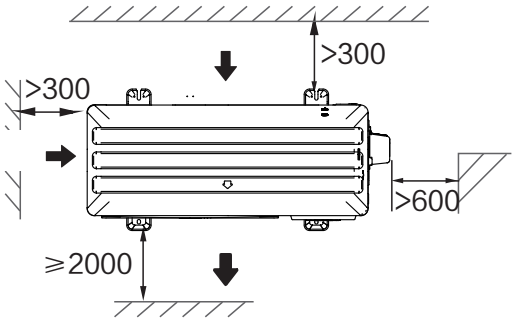

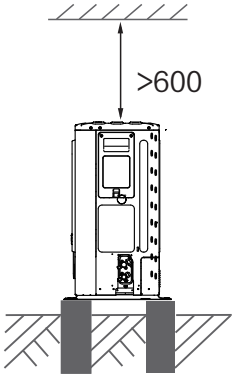

6 32 3 36 3

0

0

0

0

322

0

03

0

-
-
-
-

0

0

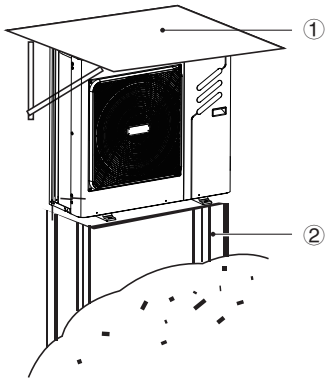

① 0

② 0

0

0

0 0

0

0

5(,67/$(

EIVQ

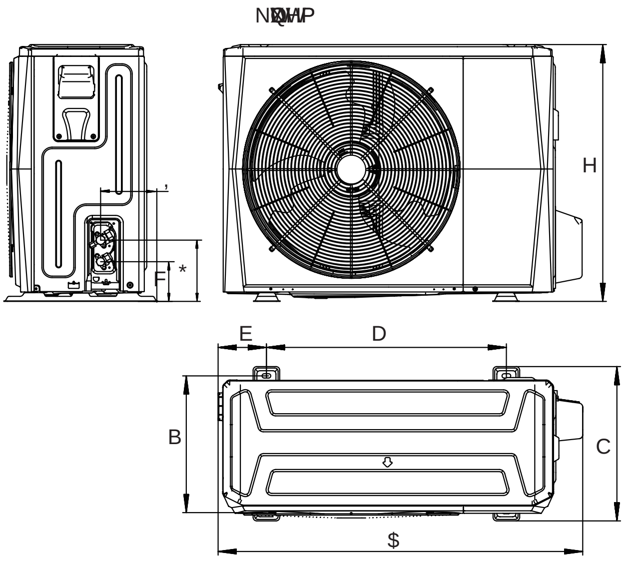

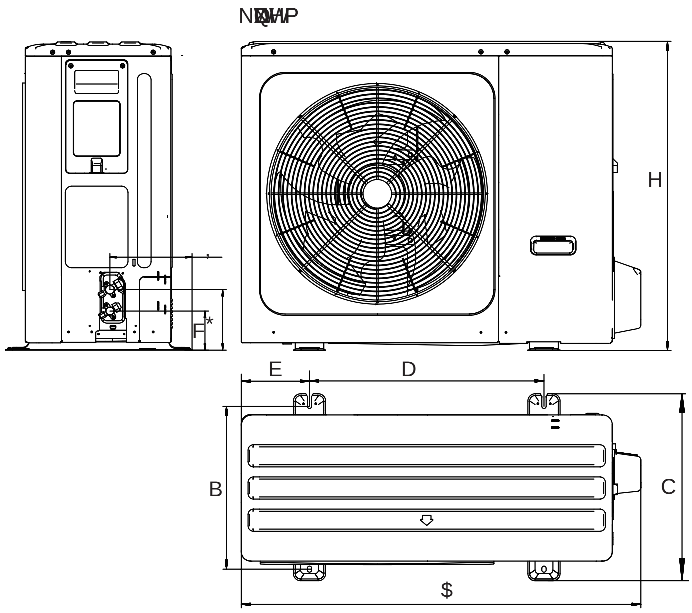

		B	C	D	E	F	*	H	,
N:	1008					110	170	712	160
N:	1118			656	191	110	170	865	

&UHHQSDODUH

- 9HUEDLUH]VHQ LSODEHQDWHD WUHQKGVQDODUH DVHOHQDWHD V QURKEUDLVD]RO KRQL
-]EDWFKVHQQLHQ[DWHDVQDEQMQQXEXLOHHQHHSUHSDWX VHWGXEXSOHDEHGHSDVQ-FDUHVVQSROHSHSD
-]QKDXEXLOHHQHSKQ-ODOHRHVWHSODVXUDDDQHL

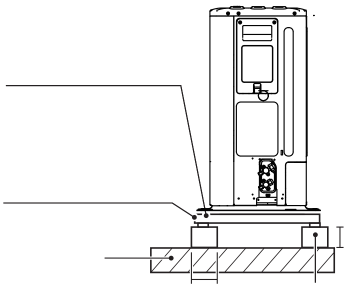

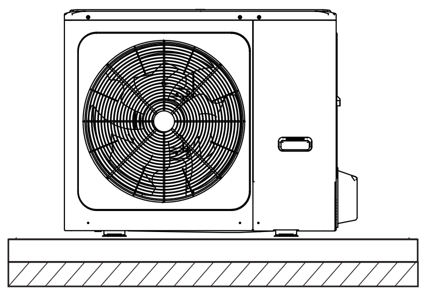

[illegible]

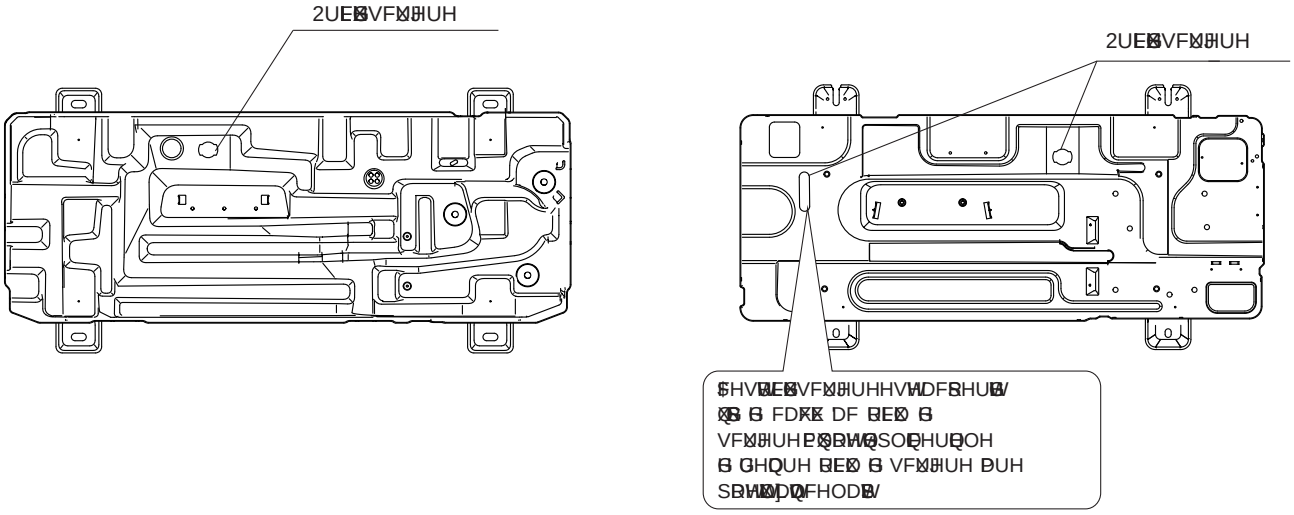

N:

N:

[illegible]

[illegible]

[illegible]

[illegible]

[illegible]

[illegible]

[illegible]

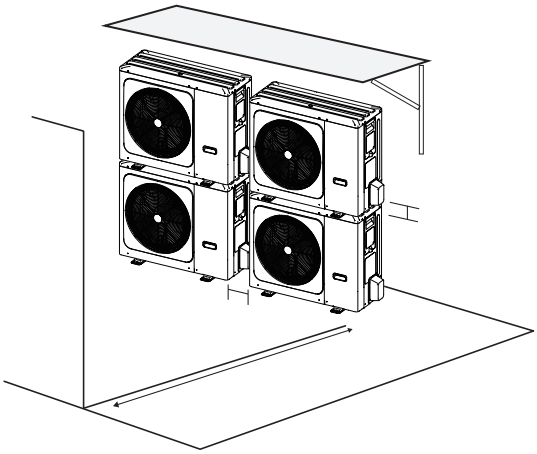

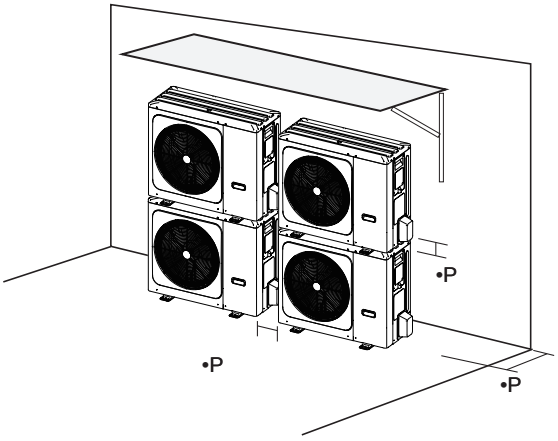

[illegible]

Unitate	
aN:	

127

[illegible]

[illegible]

[illegible]

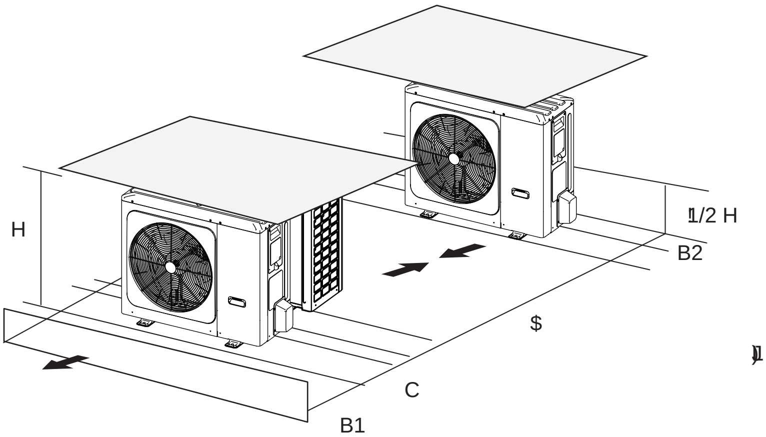

Unitate	$	%	%	&
aN:	•	•	•	•

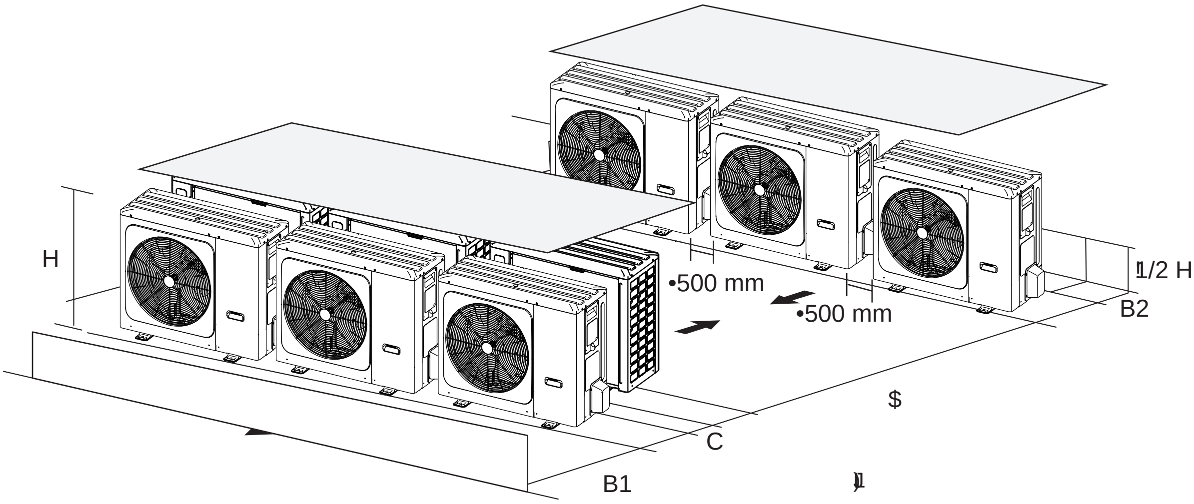

Unitate	$	%	%	&
aN:	•	•	•	•

,167$$(18&&(1&$(

7.1 RQWLE

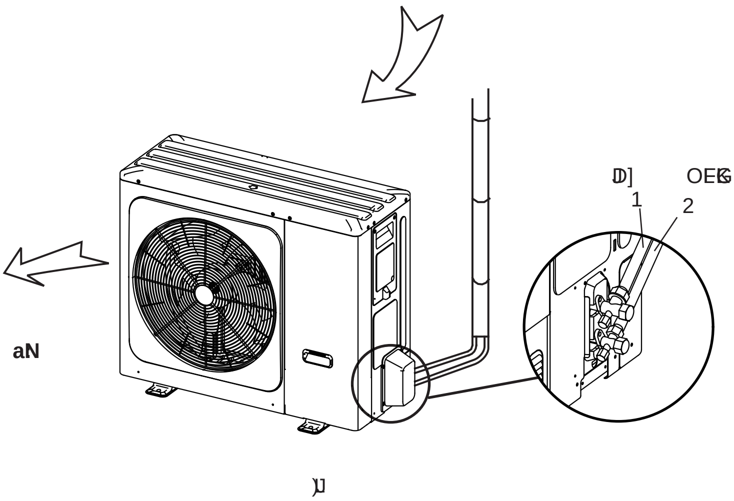

[illegible]

[illegible]

[illegible]

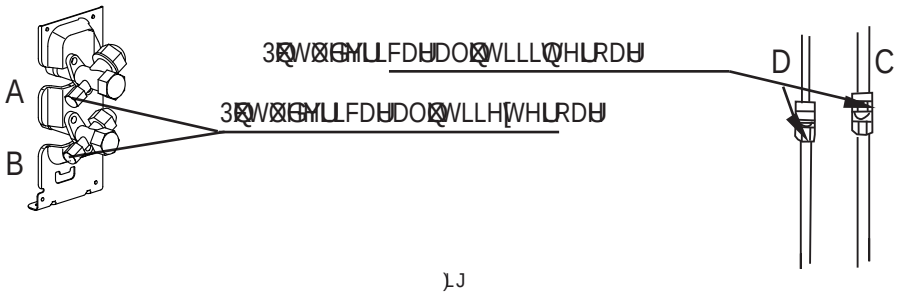
A
B
D
C

[illegible]

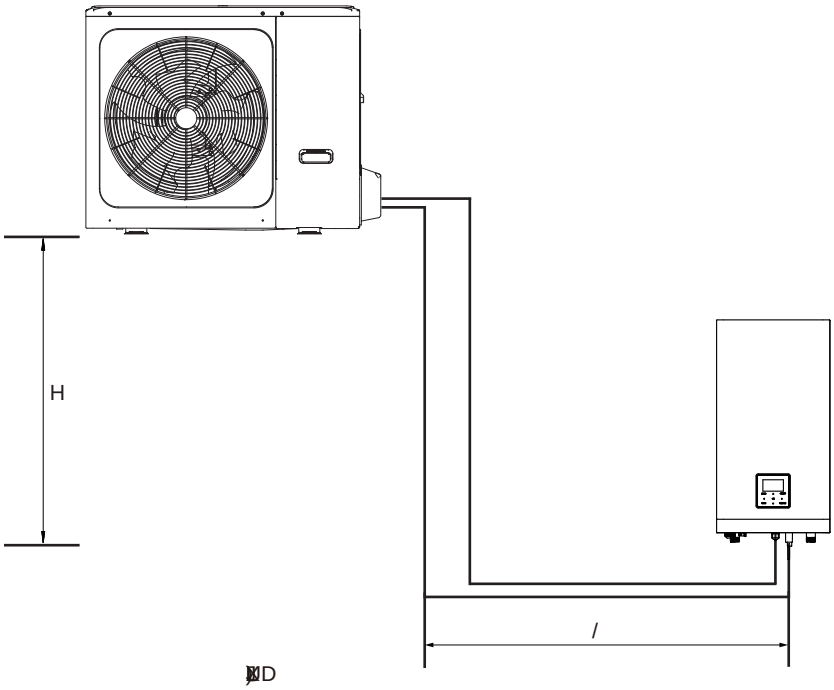

0HOV	a N
/QDDDFQHL	0m
HUHDQQH+	20m

NQDW	5	--
NWDDW	5	--

	BUHDDQX	BUHDOEQX
8QWHUR GaN:	$HUHFQDFU	$HUHFQDFU
8QWHUR	$HUHFQDFU	$HUHFQDFU

[illegible]

[illegible]

[illegible]

[illegible]

[illegible]

[illegible]

[illegible]

[illegible]

[illegible]

[illegible]

[illegible]

[illegible]

[illegible]

[illegible]

[illegible]

[illegible]

[illegible]	[illegible]	[illegible]	
		≤15m	＞15m
[illegible]	/6 N	0J	/ -15 ×20J
	8/10/12/1 /16 N	0J	/ -15 × 8J

[illegible]

[illegible]

[illegible]

- [illegible]
- [illegible]

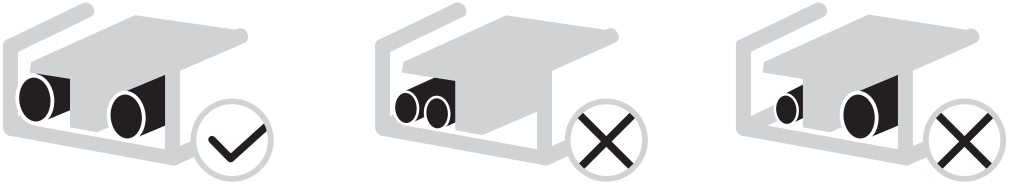

[illegible]

[illegible]

[illegible]

[illegible]

&XUHQWSURWHFWLHSUH]LVWHQWDEXQ

6HOHFWDUHDFDEOXOXL 9 DOHHOHFWULFH SHQWUXFHOHFWXUH SHQWUXHD]DWDEHOXOXL D WDEHOXOXL FXHQRPLQDO WDEHOXO VHFDOFXOHD]D FDEOXO FDUH 08 SHWVHVWH SHHOHFWURLQWHU VHVHOHFWD FXDFHDVWD VHOHFWDUH DOHSURWHMDUHD

6HOHFWDUHDMXDHUHFRPSUHIXQFWLRQDUHDFRQWXFWRUXOXLDFDEOXOXL HOHPHQWXOSURWHFWLHDFDEOXOXL FRQWDFWUHDFDEOX 0DUDW DSDUW VHOHFWDUHDMXWRUXOXL SXWHUHDUHOHFWULFD

7DEHOXO

&XUHQWQRPLQDO DSDUDWXOXL	6XSUDIDQRPLQDODVHFWLXQLLWUDQVYHUVDOH P²	
	&DEOXIOH[LELO	&DEOXSHQWUXFDEODMXOIL[
”	L	L
>L ”6	L	L
>L ”10	L	L
>L ”16	L	L
>L ”25	L	L
>L ”	L	L
>L ”50	L	L
>L ”	L	L

7DEHOXO

6LVWHP	8QLWDWHD				$OLPHQWDUH			&RPSUHVRU		2)0	
	7HQVLXQH 9	+]	Min. 9	Max. 9	MCA $	TOCA $	MFA $	MSC $	RLA $	KW	FLA $
4kW			198		12	18	25	-			
6kW			198			18	25	-		0	
8kW			198		16	19	25	-			
10kW			198		17	19	25	-			
12kW			198		25			-			
14kW			198		26			-			
16kW			198		27			-			
N3					10		16	-			
N3					11		16	-			
N3					12		16	-			

127

0&$ &XUHQWXOPD[LP
TOCA: &XUHQWWRWDODOVXSUDLQWHQVLWDWH $
MFA:)XQFWLRQDUH
MSC: 3RUQLUH
5/$ &RQGLWLHQRPLQDOD
0$ 5$ 0RWRU
KW: 3XWHUHDQRPLQDOD
)/$ &XUHQWPRWRU $

6FRDWHUHDFDSDFLWXOXLGHVHFWXUH

Unitate	4N	6N	8N	10N	12N	14N	16N	12N 3H	14N 3H	16N 3H
	18	18	19	19	0	0	0	1	1	1
%RUQD FDEOXOXL P²					6	6	6	2	2	2

‡9DORULOH GHFODUDWH VXQW YDORUL PD[LPH DVWHOHFWULFH SHQWUX HOHFWULFLWDWH

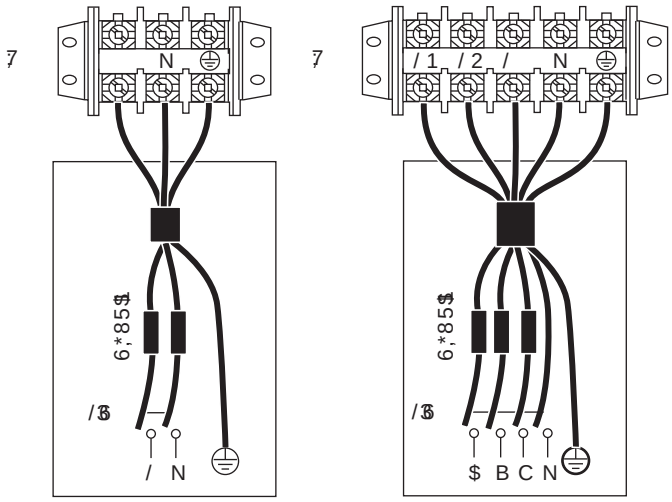

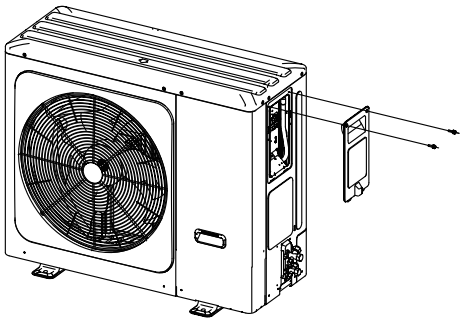

127

V

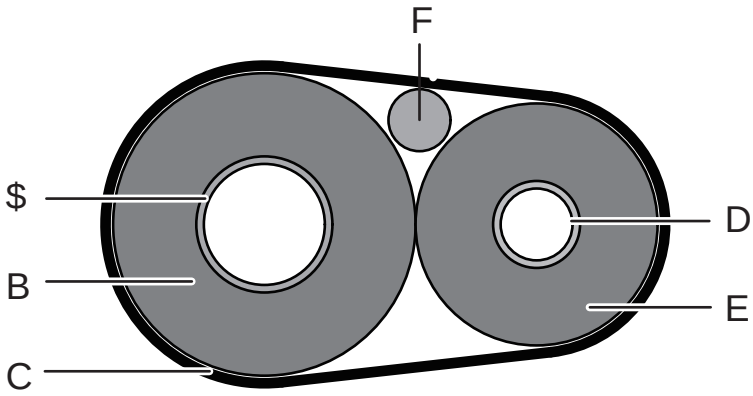

$	[illegible]
%	[illegible]
&	[illegible]
'	[illegible]
(	[illegible]
)	[illegible]

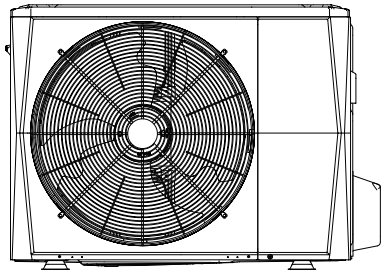

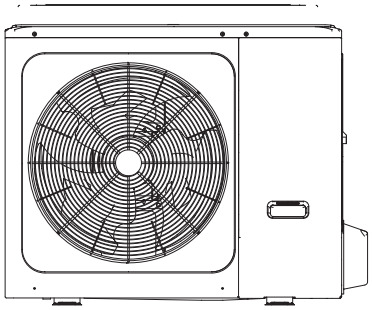

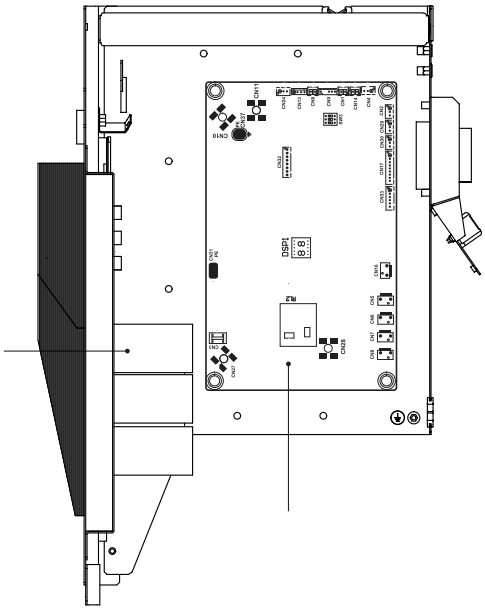

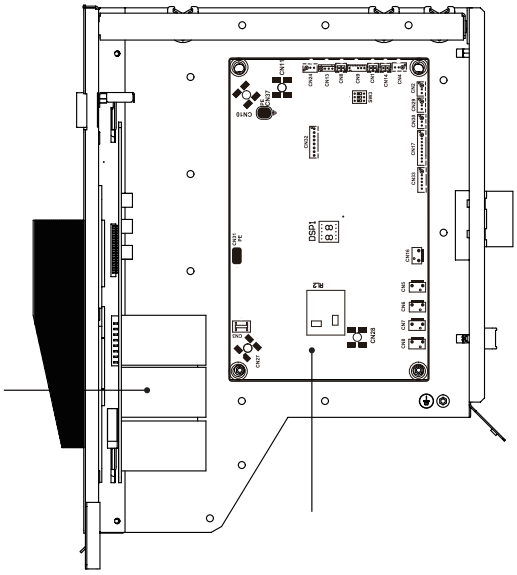

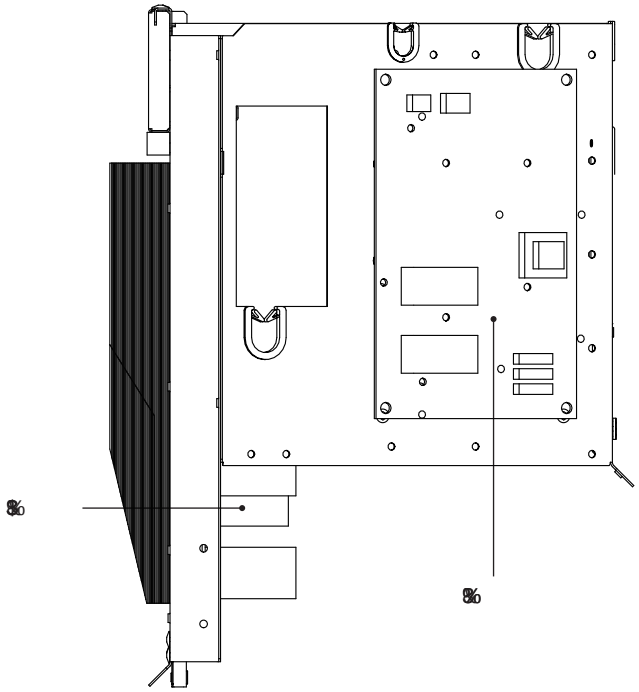

NQDW

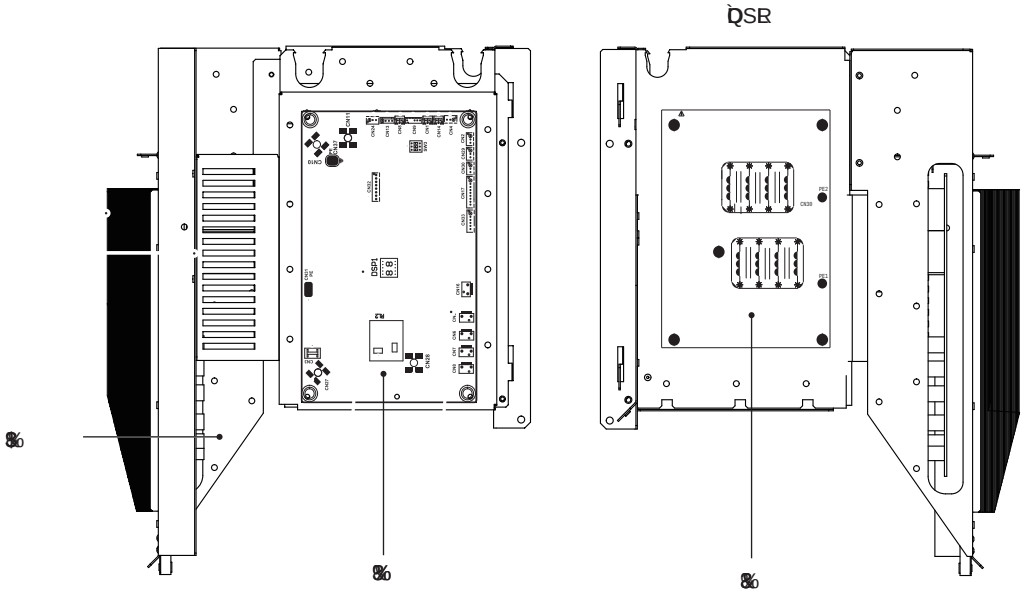

NWDW

127

PQDHVHGUSHQXHHUQRXDSUBXSUSUX

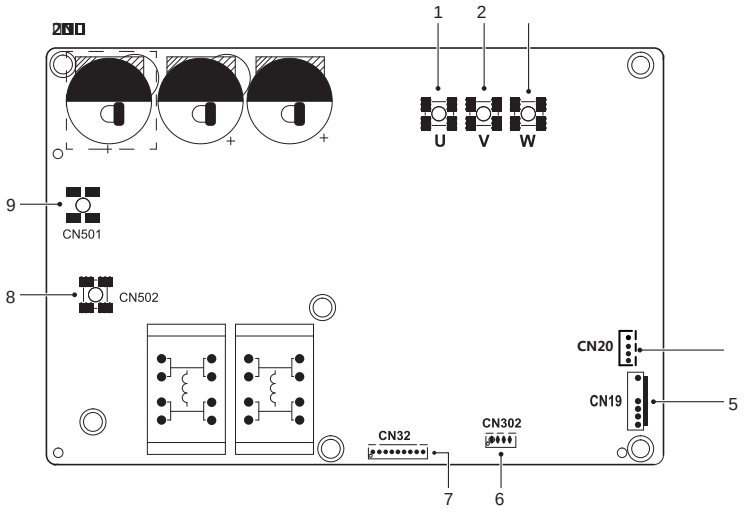

[illegible]	[illegible]	[illegible]	[illegible]
1	[illegible]	6	[illegible]
2	[illegible]	7	[illegible]
	[illegible]	8	[illegible]
	[illegible]	9	[illegible]
5	[illegible]	/	/

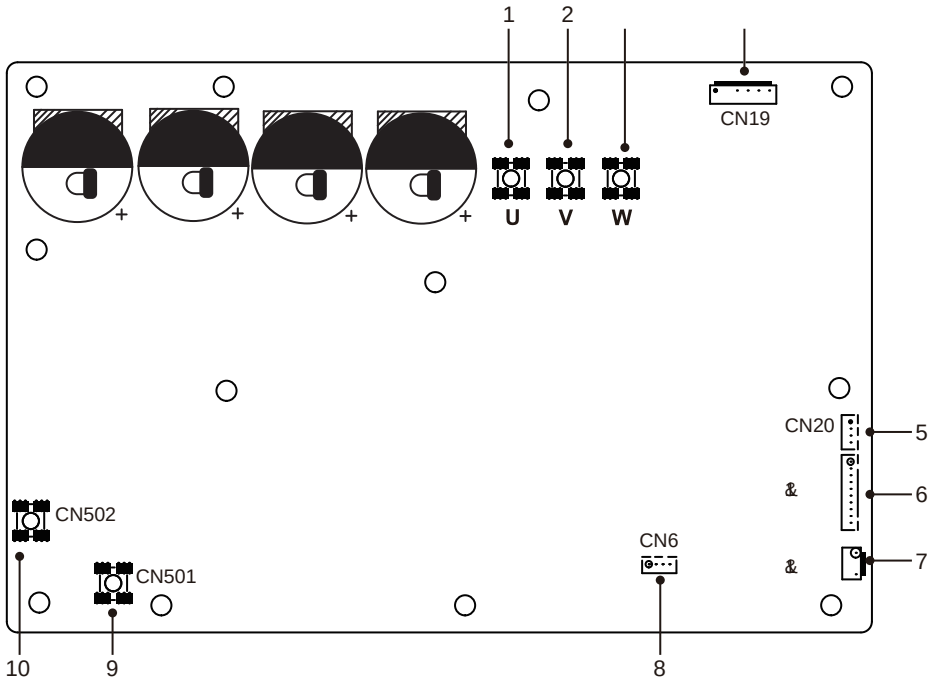

[illegible]	[illegible]	[illegible]	[illegible]
1	[illegible]	6	[illegible]
2	[illegible]	7	[illegible]
	[illegible]	8	[illegible]
	[illegible]	9	[illegible]
5	[illegible]	10	[illegible]

%sSODFDEoHFWURQLFSODQ

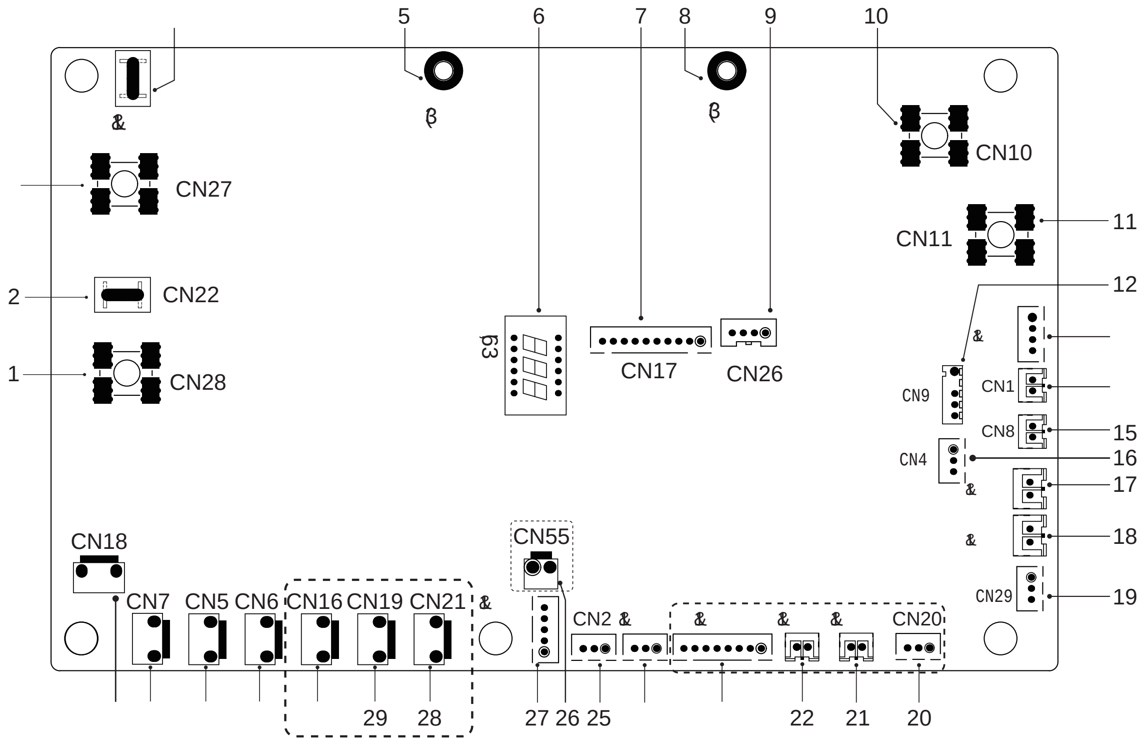

1RDUH	8QWHGDVDEOLODUH	1RDUH	8QWHGDVDEOLODUH
1	3ROGHUH/OD%	18	3ISHQFKDIDOGMRVSUHVQ&
2	5H]HUYDW	19	3ISHQFKRDUHFXODFDHFWQRGER[&
	3ROGHUH1OD%	20	5H]HUYDW
	5H]HUYDW	21	5H]HUYDW
5	3ISHQWXOGHQRUHβ	22	5H]HUYDW
6	$MDWDO63		5H]HUYDW
7	3ISHQFKRDUHF%		3ISHQFKRDUHUH]HUYDW
8	3ISHQWXOGHQRUHβ	25	3ISHQFKRDUHUH]HUYDW
9	5H]HUYDW	26	5H]HUYDW
10	3LWQDUHSHQWXHQXK&	27	3ISHQWXSDSDGHHOHFWXE&
11	3LWQDUHSHQWXVEHWQ&	28	5H]HUYDW
12	3ISHQWXHQHRXGHSDELHQWOGHHWHU VHQRXGHSDFRQWDFWXO&	29	5H]HUYDW
	3LWQDUHSHQWX99&		3ISHQWDOQGHQOUHHOHFWLEDVDL &RQO
	3ISHQWXHQRXGHSODVSUDH&		3ISHQWXQFK&
15	3ISHQWXHQRXGHSODHYDFDUH&		3ISHQWXQ69&
16	3ISHQWXHQRXGSUHVLQ&		3ISHQWDOQGHQOUHHOHFWLEDFRUHVRXL
17	3ISHQFKDIDOGSUHVLQ&		3ISHQWDOQGHQOUHHOHFWLEDFRUHVRXL

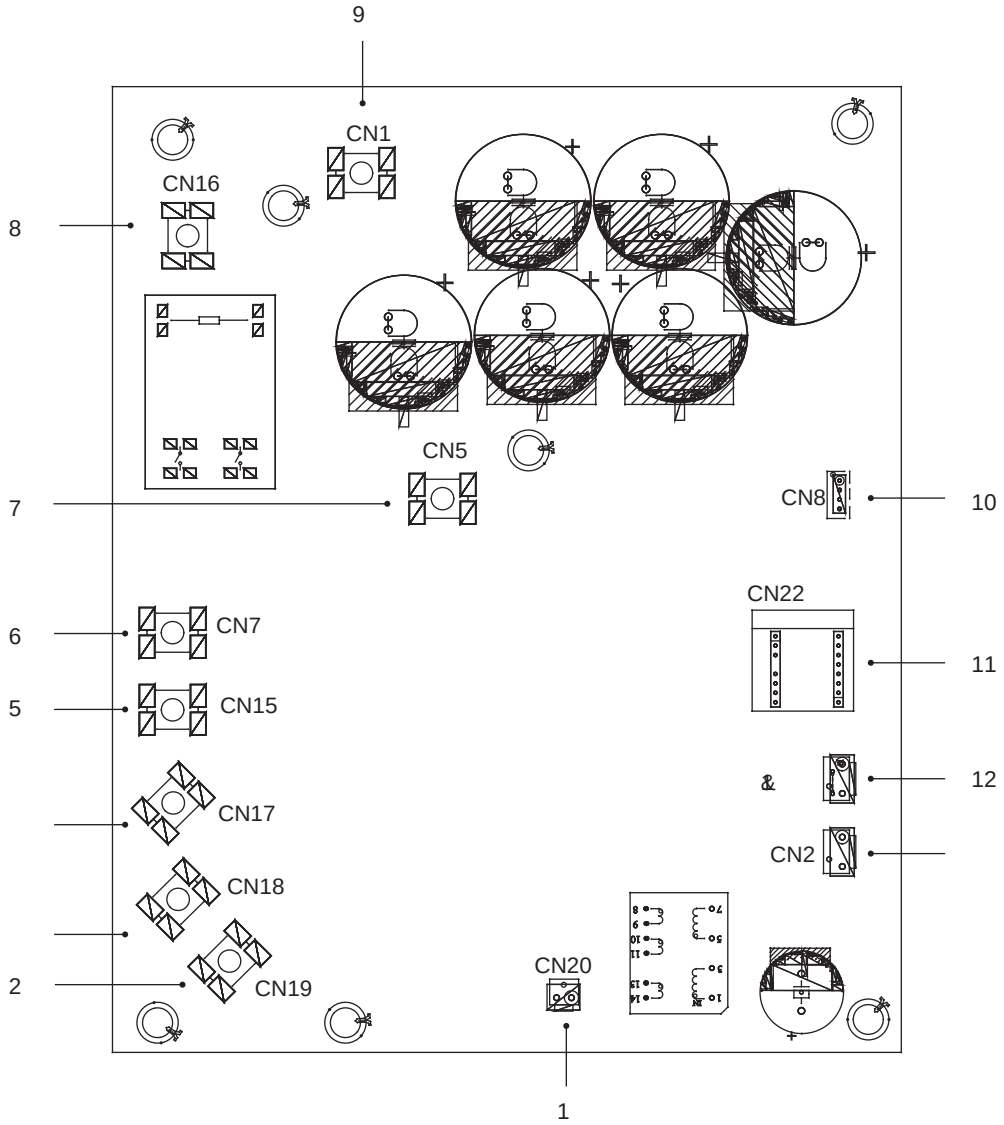

[illegible]	[illegible]	[illegible]	[illegible]
1		9	
2	[illegible]	10	[illegible]
		11	[illegible]
	[illegible]	12	[illegible]
5	[illegible]		[illegible]
6	[illegible]		
7			
8	[illegible]		

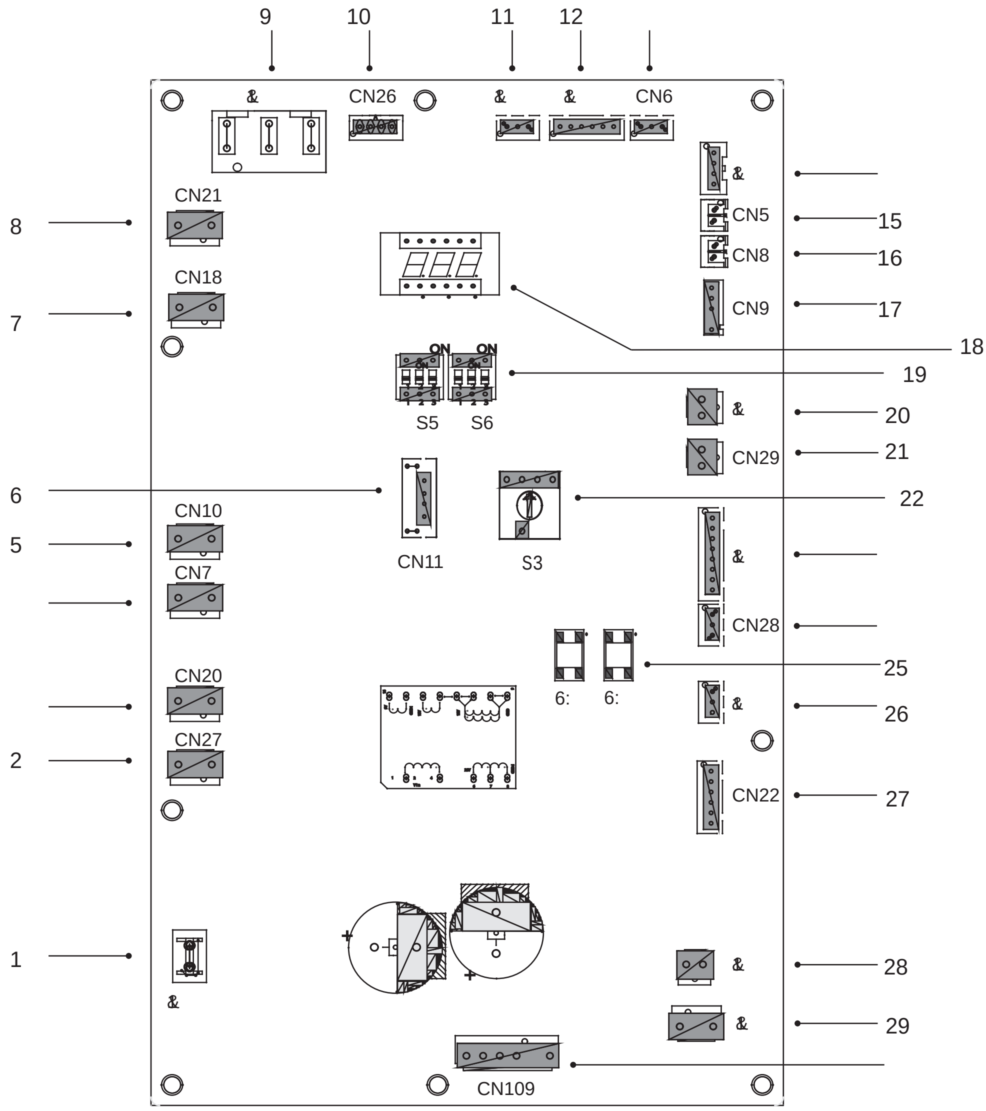

1RUH	8QLWVSDVDEODUH	1RUH	8QLWVSDVDEODUH
1	8SSHQLXOSRZHU&	16	8SSHQXHRXSWSHUDW7S&
2	8SSHQQDQFKL&	17	8SSHQXHRXSWSDEHQOQ HIUHLVHRXSWSDFRQVDWRXK&
	8SSHQQDQFKL&	18	$MDO63
	8SSHQXKDQSRSOJHHOHFWUF&	19	6ZL6
5	8SSHQXKDQSRSOJHHOHFWUF&	20	8SSHQFRXXOSMDVSUHVRQ&
6	5HJHUDYW	21	8SSHQFRXXOSQOSUHVRQUEDUH UDS&
7	8SSHQQDQFKL&	22	6Z3MW
8	5HJHUDYW		8SSHQXHRSWSHUDW7BQ 777%5HJHUDW
9	6DOEQUHDOD&		8SSHQFRDUH&
10	8SSHQFRDUHFRXOSDOEQUH&	25	7DVSHQXFUHDWUEDUH66
11	8SSHQFRDUHXODFDUSFRQ GHR	26	8SSHQFRDUH&
12	8SSHQFRDUH%	27	8SSHQXSDSDSHSDQHOHFWUF&
	8SSHQXHRXSUHVRQ&	28	8SSHQOEQUHDFHUHDQFD&
	8SSHQFRDUH%	29	8SSHQOEQUHDFHUHDQFD&
15	8SSHQXHRXSWSHUDW7&		8SSHQDQDW&

[illegible]

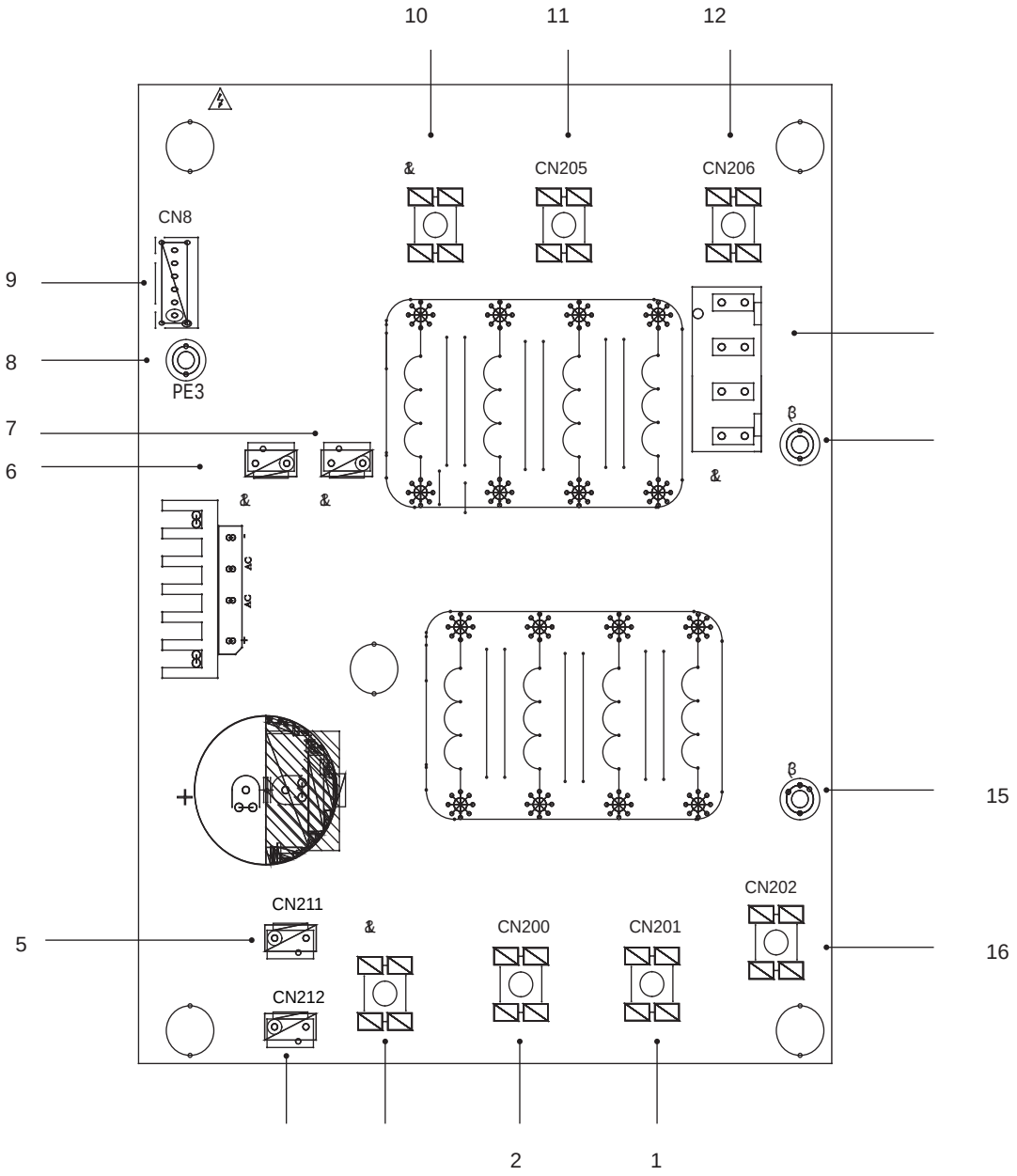

[illegible]

1	[illegible]	10	[illegible]
2	[illegible]	11	[illegible]
	[illegible]	12	[illegible]
	[illegible]		[illegible]
5	[illegible]		[illegible]
6	[illegible]	15	[illegible]
7	[illegible]	16	[illegible]
8	[illegible]		
9	[illegible]		

7(67$5($ 3(5,

$FRQQDWLFXUHHOHFKLHSHQWDUHDSHUURSHFDSDFXFDVHOHFWLE

$7(1@,(

‡7HVWDUHDSHUURHWHSHQDFDUHDSUREVWDFDLVDUHRSH

‡7HVWDUHDSHUURHWHSHQDFDUHDSHOHVHLVFKH

‡1XHUDSDWDQFHVWDQDQWUHEUFHHUHFHHLWLFXL

5(&,5&8/$5*5(178/8,*25&

VXSDFHQDSDUDWHPDUHNDWHXVHUHVSHFWDURUHOHFHUH

” &XUHQSHQWXOHSUUFDUHHHDHUVLW

9RXPPDFHQDSDUDWHXVHUHFDUHFURHOH

m$_{\text{max}}$ [/]$

VDXUDDSDUHDOHFHVDUSHQWDODQSDUDFXPDFHQHP $_c$ WHXVHFDQDW FXRUHOH

$ $_{\text{min}}$ >P$_c$ [/]@

Q

m$_{\text{max}}$ HVWHXPDFHSDUHQJ

$ HVWVXUDDSHUH ^{2}

$$_{\text{min}}$ HVWVXUDDHFHVDUDSHUH ^{2}

m$_c$ HVWHXPDFHQDSDUDWM

/) HVWHOHPHQDUDPLQP SHQWUXHQUE5DORUHDHVW

” QDODHQDDWHFDESHQWUXHSHQVWDWDUHEXVHOXFUHWQDUHDW

” QDODRODUHUFXFHUHOHHDWHQWHUDHFDQFHQWHDW

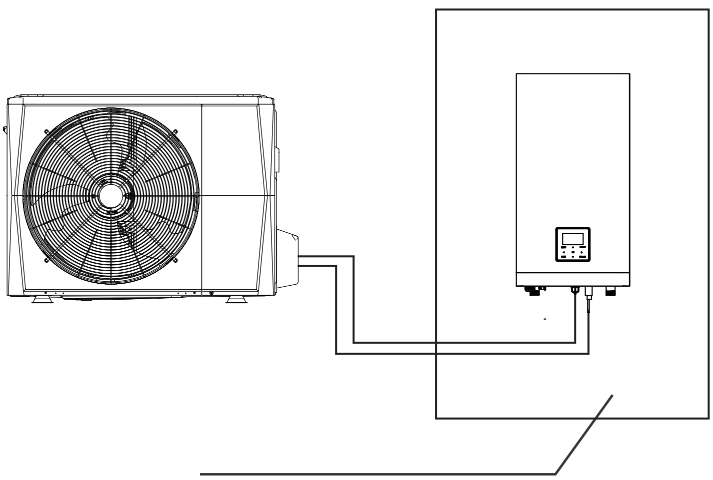

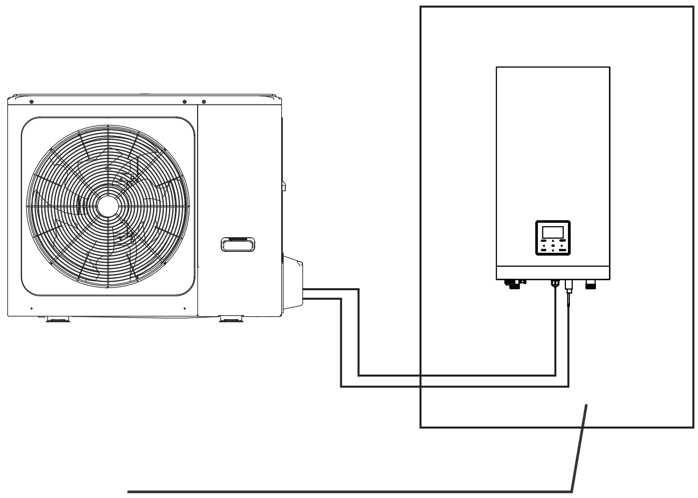

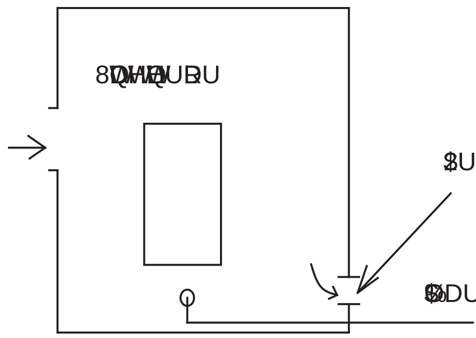

5(&5(/7

0DQXDO SODUHDOUHUHDQXDO SODUHDOHWUHUHWHEXWVHFOHXOEDEOW
HQXDO SDUHFOHQRWDOL

⚠ $9(57,66(0(17

‡ 0HVDVWWEXOKHQWQWDODUHDSRHEB FOK QWDODUHDEROHSRWHSHODVFXUHUDSR HOHFWWEHQ

‡ 0HVDVWWEXOKHQWQWQL UHSDUDWQHQUH ÈQWOHUHSDUDOHWQHQUHDERROHWUSWD KHODVFXUHUDSRHOHFWWEHQ

‡ 8WQXKHWRXDHHOHFWWEHQHQHVDX WDOHVDXDFDWVHDJEROHFKUL DFSRUVVDVDODOEHQUHDSHODL WWEOSHOQWXKQ

‡ WDJUHDQURUHVDHOHFRQ $HVOKUSRWFDRXHOHFWWEHVDRQHQ

‡ 1XSVDQEDWRHOHFRQRHFW XVDXVFW 7HOHFRQVSRWSHURD

‡ 1RNOWDEDROWDQ FXHQOUHWDFROWFDEOXDRWRQ VXDQHDUB 8QUHDGFDEOXVXUHFXSRWSURD SHFDUHDVDXUHUHDQHQ

‡ WHSQUHDFRSXXDDOSDHUSHOWR SHUQROQW

‡ 1QHSHUHOWHVDXOWRLFWQEX GQDUHVDUHDHUXL QDWWVHURHFWSUHSRWSURD WL

‡ 1RERQSUDQDDEOFRUL DVSVDXDFQSURUHDQ $HDVDSRWSURDQHQ

‡ 1QHDEWLFWQEXHQDUHVDX SHUHDHUXL 2EHFWHOHFDUHDQQWDOODWUPUHSW SHUEXOVH

‡ 1RUODFHVWSURVKB HHXHSDOHQVRDWVWHFHVDU FRHFDUHDFHVWHKXLVHSDUDWSHQX WDDWQSHFDO 1RUDSDUDWOHHOHFWWEHFDHXL RSDOHQVRDWSDEHQWHFRHFDUH VHSDUDWHFWDWDOODODSHQX QSVSUHVLWHOHFRHFDUH WSRQH

‡DSDUDWHOHHOHFWWEHVQUDHOLUSLVDX HSRHWHSWFXUHVEVWDQ SHUEXOVHQSHSWRQDQWR SHQRUX

‡ 8WQPSUHYQFXUHDHDQXEH FDQDFWWEXO QVWHVWDODDQDQRDFU PHVWHQFHVDUVSVWDLEOHSHUHQ FRHQDDHQXEHVFXVDFFHQOÈ] FDXUFDWQWDQHQSHUHSRWUHQ FRQDWUD

‡ 8QUEHQUDDFOHVWHVWDQ RDOQHVFXH DFDHQXEHVFXHQSHUHFDFX ODFDUHXUHQWDXUDJSRWHOD HPQUHDSDHQ

‡ 2SUEHWVSQQ]UHSHUDB FRXWODUHVDPUHDEQFDWWEXO RDDFRQWD 1RWSRDSFOXSRQDQ VHUHHQSQFSDUWHQDUHVHFXUHD DFQHEHVWUHSDUDW

1121(

‡ 1RWSRDSFOXQOHWFRO 8WQXKHWRHWRUDUHDFDOHRDSDUDW SHQXUFWQWDQSUHFHDOHDSODW DQOHVDXKHUHSDUW

‡ ÈQDSFXDUHRUQUHDDFQL WHUXDWXOQSRKVDXFXODEDEOXB DOHQUH ÈDFQDUSDWUHXOWRHOHFWWEUH

‡ 8WQXKHWRHOHFWWEVDRDVXDEB HVWDQDOQWFWUVFXHUHODSQ

‡ $VXDFSRDSFOXHVWHRQ 8WQXKHWRXDHHOHFWWEHDVXDEQDHVW SQWDEOXSSQUHQVWHFQFWDOD FRUDSDVDXSFRQXPXSDUWVQWDX SQUHDFDEOXGHSHOHQ

‡ 8WQXKHWUXUHDQSDSUWFD YQDWXOXQWUH

‡ 1XUHDSRDSFOXFRQHQ 6HSRWSURHQHOHFWWE

‡ 1QDUSRUHOHVFRWXOFOX $HVWDVQVFDUSWDKHODWL

‡ 1QH]DHFWFDUHDUSXDUHDWS WDWVXQWDXRU 6HSRWDFRQFDWDHSHW EHQSRUHHVWHRDWDXOWHVWDU

‡ 5QUHQQWUEDFVRW QFFHVRDHQUHWQHPSHWUHDUH DFVWWDUHDWDSRWFDSRWHOD WUH

‡ 8WQXKWVEQSHQUHLEDFUHD VKHQFVHRHWHFKDSHQXUW 9UHQQRSRDSFOX

‡ $UDQDXQVFXHUHSHWQDVDDGHQM QP UHQMXEROHSRWURPUHJHOD RDHUXXFW

‡ 1XEQSUDHQUHQDOHUHDWX 1QSUDWSDUQRD8QOHSUQUHVW SHUEXRVHODUHSWHQDHFQOH HFKDSQX

‡ 1XHDODQSUXUUWQHQUHSHUVRO QFDWWEXOORDOSHQXUUDOHSQHQUH

‡1[illegible]

‡[illegible]

‡1[illegible]

‡1[illegible]

‡1[illegible]

‡[illegible]

‡[illegible]

‡[illegible]

‡7[illegible]

[illegible]

13.1 [illegible]

[illegible]

[illegible]

- 2S[illegible]
  - 2[illegible]
  - 9k[illegible]
- 2S[illegible]
  - 3[illegible]
  - [illegible]

0[illegible]
[illegible]
[illegible]
[illegible]
[illegible]
[illegible]212)
[illegible]

[illegible]

[illegible]

- [illegible]
- [illegible]

[illegible]

- 2S[illegible]
- 6[illegible]
- [illegible]

1 0[illegible]
[illegible]
[illegible]
[illegible]

DFDSDUH[illegible]
[illegible]
[illegible]

[illegible]

- 2I[illegible]

2S[illegible]

- 8[illegible]
- DFD[illegible]

[illegible]

- [illegible]
- [illegible]

[illegible]

- [illegible]
- [illegible]

[illegible]

[illegible]

COD [illegible]	[illegible]	[illegible]
E1	[illegible]	[illegible]
E5	[illegible]	[illegible]
E6	[illegible]	[illegible]
E9	[illegible]	[illegible]
EA	[illegible]	[illegible]
H0	[illegible]	[illegible]
H1	[illegible]	[illegible]
H4	[illegible]	[illegible]

&2'(	&$86(5(0(',(	&$86(6 5(0(',(6
H6		
H7	3UREOHPD HDFDOQHQD FUFRODULUHSDO	
H8	HHFNQDVHQXOX SUHVLXQ	QFHUFDVHQXOSUHVLXQHVLWHVWOEWXUL D HHFNQDVHQXOSUHVLXQVFKLPEDUHD VHQR
HF	HHFNQDSOFLHFRQWUR DPXQRUUDXOX EEprom	3UDFWLFURSUREHUH SURHUHVFUHWHOH SUR &XLSUR VHSHFWVFKLPEDUHSUR XUHQSDOHVWHSHFWVFKLPEDUHD
HH	HDUHURQH	QXODL
HP	3URFDODSUHVLXQVFXW 3IVDSHFODQW HIQRR	QXODL
P0	3URFHODSUHVLXQVFXW	6LVWHPXOSVHWHPSHUDWXUHLQFDUFDL DFHQWUXOLVDQXOSLW ÌQHFHULXUHVDVFKLPEXOFLON HIWUHHVHWLGUVDFKHDVOEROHDDVXSUD XDLVFKLPEXOFLONHQWUHDVXSUDL RVWUD HEXGDSHVLVXSUDVFULVXSUH &HWD 6XSDSHSUQHOHFWEHVWHEORDWDFKRFWX SQDUHHVWOEQSDPDLPXOWGHEUSX VXSDSHQDFDSFQDQWXOFKHDL SHQWXUDVXDFDVXSDSHQWUHSDDFHFHW

&2'$(	&86 5,0(',2	$&&25*,0(17,
P1	3URFHGXUDSUHVVLRQHDW	0HVVDJJLR HEDVODSDVDVWD... HVWSREO[...] 3UHVVLRQ... SHU... 6XUDQ... UHEROR... 6XSDSH... HQDUHH... VXSDSH... SHU... LODUHD... DOUHEHUH... DSDFXVFKL... PSUDWD 6FKLXGHUHVDGUVDWD... DVLFKLXGVDSUWD...
P3	3URFDUDFSUHVVLRQD VXSUDFHQW	
P4	3URFHLODWHDSUHVV HVFUFDUHQDW	$HODWWDSHQW 6HQVRUHSHUDW7DWHVWLOHUH 6HQVRUHSHUDW7HVWLOHUH 6HQVRUHSHUDW7HVWLOHUH
P6	3URFDUD	7HQVLRQDSDOHEDUHDVWHV... 6SDXQHVWHSUHVVSHQW... 6FKLXGHUHVDGUVDFKLXGHUDD... 9HQWDWRUHDOXPQWDWRUVDX... 6XUDQFDUHFXQHEDUHDOHQW UHEROR... HEDVODSDVDVW... 6HQVRUHWHPSHUDWXUD... UHOHVD... 5HFDUFDWUH... 3DFDUDQHVHF... DFDSMDEDQDVFDUHVXUH... 6XSDSHOHSUHVVRQHVFKLOH

Pd		
C7		
F1		
bH		

L0		
L1		
L2		
L4		
L5		
L7		
L8		
L9		

	N:	N:	N:	N:
	220-2 0Va 50H]			
		:		:
		$		$
	[illegible]			
			1180*890*560	
	0[illegible]			
	[illegible]			
	9H[illegible]			
[illegible] frigorific				
Tip	5			
Cantitate	J		J	
*UH[illegible]				
*UH[illegible]	NJ		NJ	
*UH[illegible]	NJ		NJ	
[illegible]				
[illegible]	3		3	
[illegible]	3		3	
[illegible]	DN 2			
[illegible]	0m			
[illegible]	20m			
[illegible]	[illegible]			
[illegible]				
0[illegible]	-25a &			
0[illegible]	-5a &			
0[illegible]	-25a &			

	N:	N:	N:	N: 7UDÞW	N: 7UDÞW	N: 7UDÞW
	9a]+			91a]+		
		:	:		:	:
		$	$		$	$
	[illegible]					
	1180*890*560			1180*890*560		
0[illegible]	0[illegible]					
[illegible]	[illegible]					
6F[illegible]	9H[illegible]					
[illegible] frigorific						
Tip	5					
Cantitate	J			J		
*UH[illegible]						
*UH[illegible]	NJ			NJ		
*UH[illegible]	NJ			NJ		
[illegible]						
[illegible]	3			3		
[illegible]	3			3		
[illegible]	DN 2					
/[illegible]	0m					
[illegible]	20m					
[illegible]	[illegible]					
[illegible]						
0[illegible]	-25a 5[illegible]					
0[illegible]	-5a [illegible]					
0[illegible]	-25a [illegible]					

$_2$DDFHU DDFHQRSUFDUH

ÈVHQVLEOH SDSUH
1ESHUVRQDO DUH HHFWDO KRUULQ DVLVWRU HUH DUHGL HQQDFXQD EHFDXWFDUHFQ
VDX RIQHQWE QDPEHO WHEX VHVQ HVXVHOSDSUH SHUXWDUL RQHQDX
HSRI DVWXVHOHSDSUH VREHQXOWUD EHXVHSVDWDVHSDUWOROD QDWDOUH
UHSDUDUHQSUDUHHOSUHSHUDUHDKQEQDPEHODSUWHOEUDUHQDUDUH
HQRVUXDDFDWHDRSUXOHFDPRQLWEHXVHMUHDWVRUDFXQPSSHUPHQDPEHOH
VDXVLFXSUHSUH6HHVDVHRUFDUH,176 ROVX8/

ÈHULVLW
$XDEQHSHVWUXOUHVDFXHVW HULVWRUHSVRQHDFFHVDVRVDHHFROUUOOD
FDOQOUDHODSDHULVLUHWEHXVHFWQHUDQDUHVHFWOFUUHUVLUHDWEHXVLSHUVHQ
VDQQEHDHQEHOEHUDHSUHHUDOHSRHHHUQHU

9HUEUODHFSDHPQOHEHH
ÈQRQUHQDUHVQWFKDWFRQRHOHFWHDFHVWDWEHXVHDDWFRXSHFDDHFWQEH
RQWEHX UHVSHFWDWQWXFKQH G QHQUH LG VHUH DOH SURGXFWOQ ED G RQO FQXOL
GSDUDWHQWDO SURGXFWHQVLWLRUUHOH YUEUVLVH DSOE QDOODO FDUH QHDDHQ
UHQDPEHOL

- 9RQRUHVW FRQQRDFDHQUHQDUHVWQDOLWSHVHOHFDUHFQHQUEH

‡ (FKSDPWHOHUODHQODHRDDDFDYQVWFQW

‡ DFVHQUHDRUFUUHUHUDUHQHFWFUFWHOHVHFQUHWEHXVHSQXUHQDHQEH
DUFDMHOHHFKSDPQQHOHDOH

‡ 0DUFDMHOHVHQOHFDUHVQQEOHEHQHFWDW

‡ QWDVDUHQDQHO G UHUHUDUH VQQWDOWQSDU HVW SUREDEO V L H SXHODEH
VXVDQGDUH SDWHD FRPSQH FDUHFQHQWEH FXI SD FDQDUH FRPSQH VQ
UHDOWHQWUDOHFDUHVQUHQWHQODO FRQVDXUWDWHFHVSRRDFD

9HUEUDOHWVPOHHHFWH
5HSDUDUHDWQHQUHDFRQRHOHFWHWEHXVQOHUEUUVDDQQHOHUHSHFD
FRQRHOQDQRUHHVWHFDUHDSWDFURUVDDODWVXVDOEDQUHFXUH
HOHFWEXEQFDDFUFQHFQDQVDUHOTDWDFWDFHFQDW
UHFWDHDUHVWHFVDUVVHFQUHDVHVPDPROHDQDFDWHVOXVX
YDSDDUHDXHFSDQVHODWSUHVHHPW

ROHOHRVDDQOHQOX
- 9HUEDUHDVFUFUHFQDRDFHVOFUXEHX HHFWQRQUVDSHQWVSREDDSDUHL
GVFWQL

‡ $XDUHDFQVOQHOHFWEHVHQWQEDEOXQRFUUHFSHUUVDMUVVWK

‡ VWQFQHRUH

5HSDUDDDFRQVODW

D QX UHSDUUL FRQRHOH VLDDWVWVX VHOH G DOHQUH FXHQUH HOHFWUH X LGFRQDWG OD
HFKSDPQODFDUHVHUHODOFUUHQWSVFRUHDFDSFHOHVDODWHFDVHWDEVRQHVDUDOEHQUHD
HOHFWEDHFKSDPQORUQUHSDUDHDSHUPQWSFDUHDVFHUHEWHXVHDRDVDW
QQFHOHPEHWSHQDUHQDVXSUDLVWVSRQOSHUEUDVH

8WDUHDQGDOH
RQOHVVHQWHUHGEHIRUHXVHRUDVDOWHUQDWLYH

- RSUDWHUUH

‡ RMDEHFWRFRQ

‡ RFXL

‡ RMDEHFRQ

‡ HVFHEHFRSUHVDXUDUH

9RXUEDWWHULHVDUHFXUDWRUHVDUHUHDGIDW6WRUHXVSODWH1SHQDOD
RWDEDOQDQ(WSRFDDFHVSURHVFWUHSDUHDEDWHL

8WDFHDVDUUHQHXWUDOHQ
6SODUHDVHUHDOHDSUQSHUDRWDWLPX1ERUHDRHOHSQDEUHDSUHVRXSR
DHUVUHDQWUHQHOHQHHMQHDODRHVRVHUHSHWRQHVDWHQEQWP

RUHORUFDUHDQOFX1VWRWHXDHUVDSUHVRDDWHUESHQXSHUWUHDOUHDOXUUDH
SHDVRHUDRHVWDEVRQOFVHUHDOHDRHUDEUDUHSHFW
WDYHUHDSHQXSRDRVWRXODERXVHSDSURHHVDWQHVRD

RHXRUFDUH
RHORUHXOHFRRQHSUFDUHWHXUHSHFDWXRUHOHFHUH

- WFRQUHDUDHDHQHEDRWRDHFDHWSUFDUHXXOHVDXWOH
  WHXVHWXWXHSWXUHXHFDWXDSDHWRERFRHVWD

- [illegible]

‡ [illegible]

‡ [illegible]

‡ [illegible]

[illegible]
[illegible]
[illegible]

$FOXDHQWUH

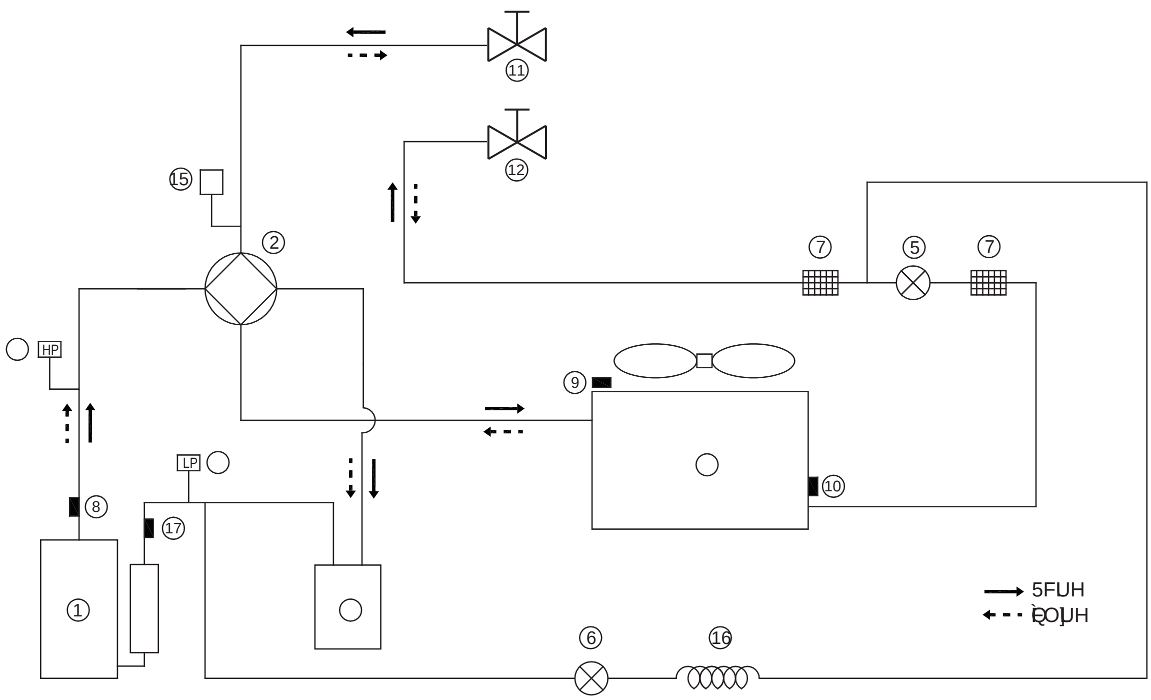

Legenda	HVFUHUH	Legenda	HVFUHUH
1	&RPSUHVVRU	10	6HQVRUWHPSHUDWXUDFRQGHQVDWRU
2	9DOYXOD	11	6XSDSDSRUDIOX[
	6HSDUDGRUOLTXLG	12	6XSDSDSRUDIOX[
	6FKLPEDWRUFOXSHSDUDWRU		3UHVRVWDW
5	6XSDSHOHFWULF		3UHVRVWDW
6	6XSDSHOHFWURPDJQHWLF	15	6HQVRUSUHVLXQH
7	)LOWUX	16	Capilar
8	6HQVRUWHPSHUDWXUDUHYDUVDUH	17	6HQVRUWHPSHUDWXUDDVSLUDUH
9	6HQVRUWHPSHUDWXUDH[WHULRU		

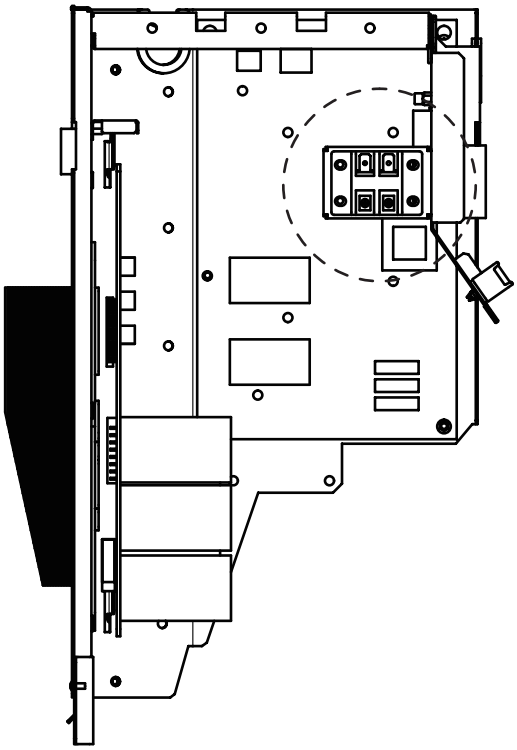

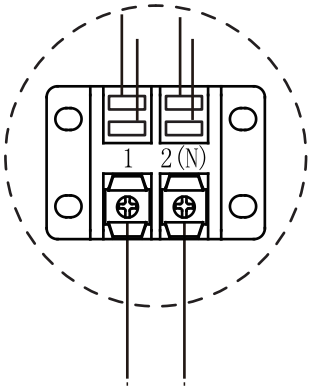
1
2(N)

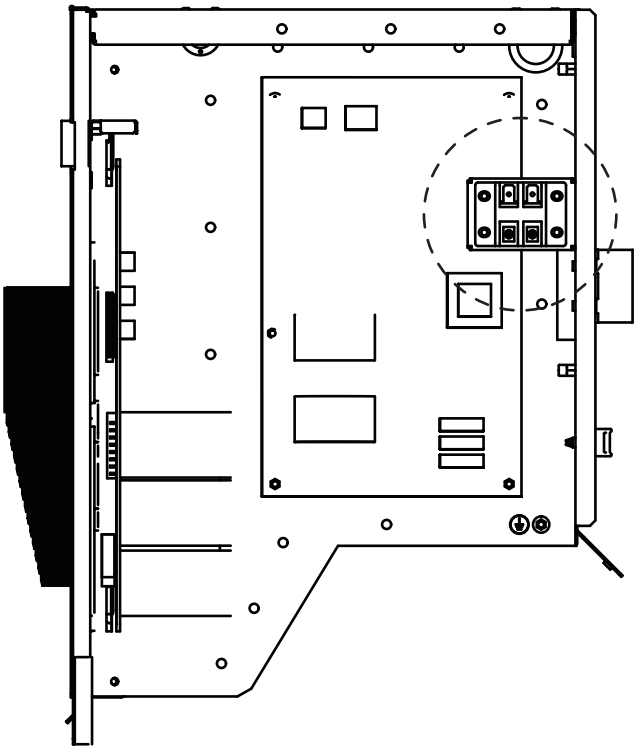

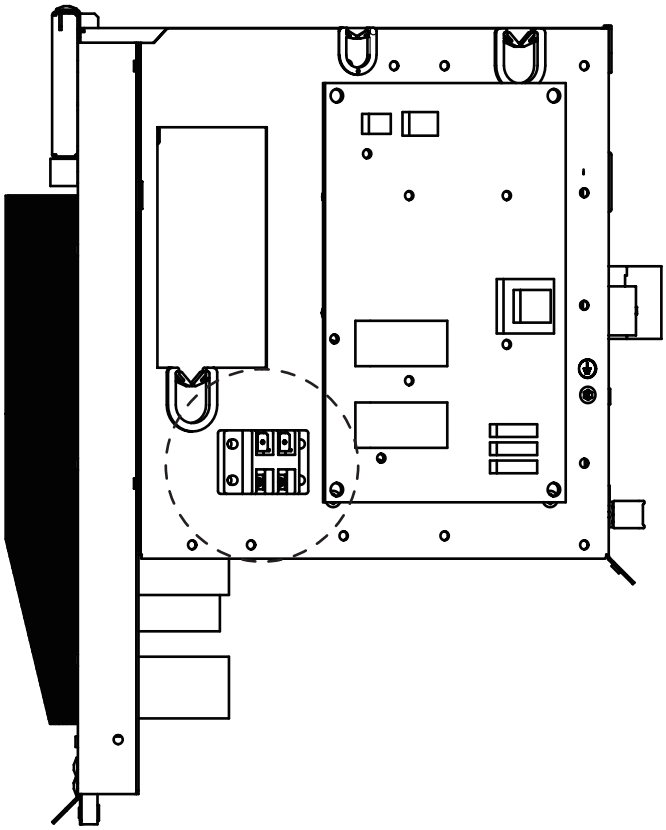

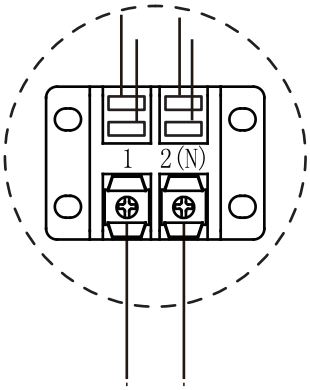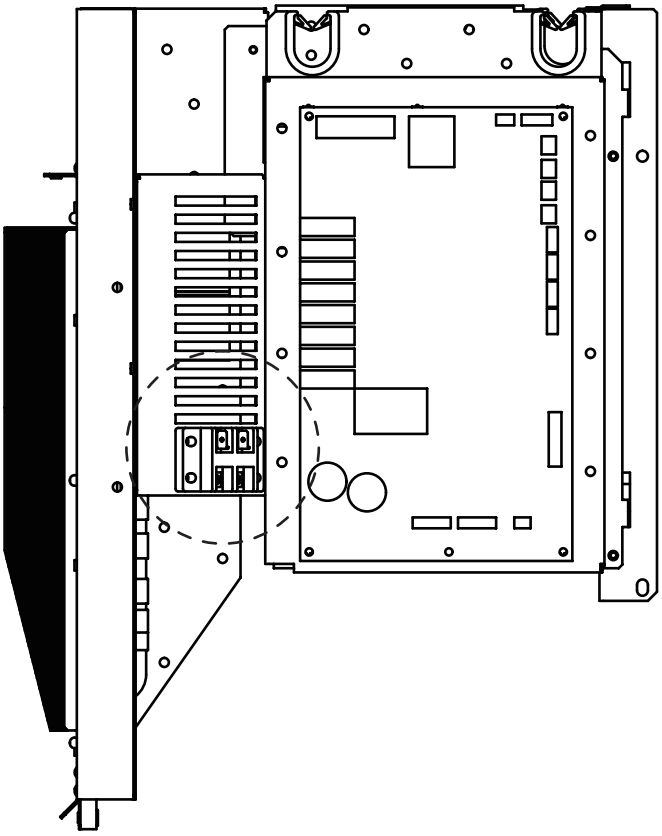
1
2(N)