CUPRINS

1 2165,(5$59,1685$$ 02

2 ACCESORII 05

- $FHVRULLQWHUFDQWD 05

3 Ì1$,17(67$5(........ 05

4 1250(3257$7$591,(78525& 05

5 2&1675(........ 07

- 6HOHFWDUHDOXQJLPHOHUHFL 08
- 3UWMDUHDEDWDVDUHOL 08

6 35(&$167$5(........ 09

- EVQ 09
- &XUHSVDUDUH 09
-]RORRUDVFXUH 10
- &XUHSUHSDUHSSDUHSVDUH 10

7 ,167$5&8728&7$5(........ 11

- &HSDUHDE 11
- HFWDUHDVFXUHOR 12
-]DHLUHU 12
- MHUGHFQDUH
- ÌQSUDRGVDDSDUW
- 7HVDUHDHQWDDLW
- XMDUHDDHUDUR
- DQHDSDUHEHDGDW

8 Ì1$7,(725($(........ 15

- 3HFDEXUHHODOFXULHDVRDHFDEOXOXHOHFWUH 15
- 3HFDEXUHHODFDEOXOLHSDOHDQWUH 15
- &XUHSUHSSVUHDQ 16
- 6FRDWHUHDFDSDFXOXLEHDWHL 16
- 3HQWXOL]DUHDQDOUHHUH 17

9 35,95,(6896835817, ... 17

- HQUHDQV 17
- XSFRQOHFWRQ 18
- 8QDWHaN: 20
- 8QDDWHaN: 22

10 76758355, ... 25

11 35&Ì&&55(78852& 25

12 35&&5&7 26

13 8121535250$ 28

- FKDHQSUWFH 28
- HVSUHQHUXHUHDDOHQEHQUH 28
- &SDFDWHQOUH 28
- &DSUWFHDFRUHVRXX 28
- 2SHUDUHDQSUFUHQOUH 28
- &UDFWLWDOHQQQSQOUH 28
- HYDUHDQXQQSQOUH 28
- &HURUH 29

14 63&&& .....

15 1250$59,(6595$ .....

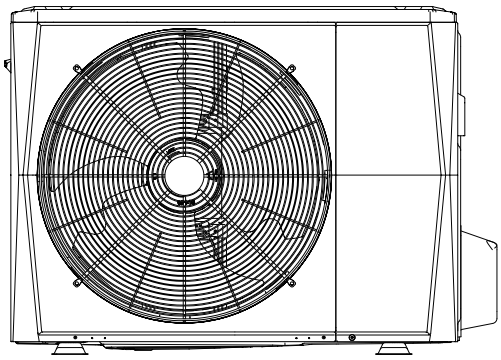

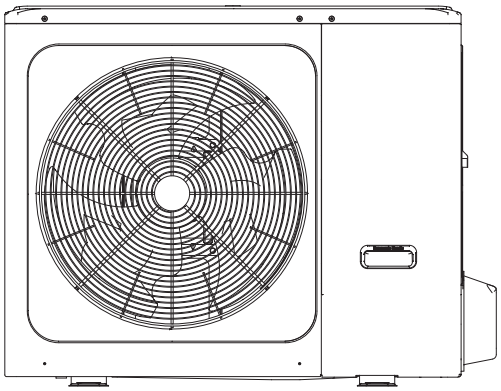

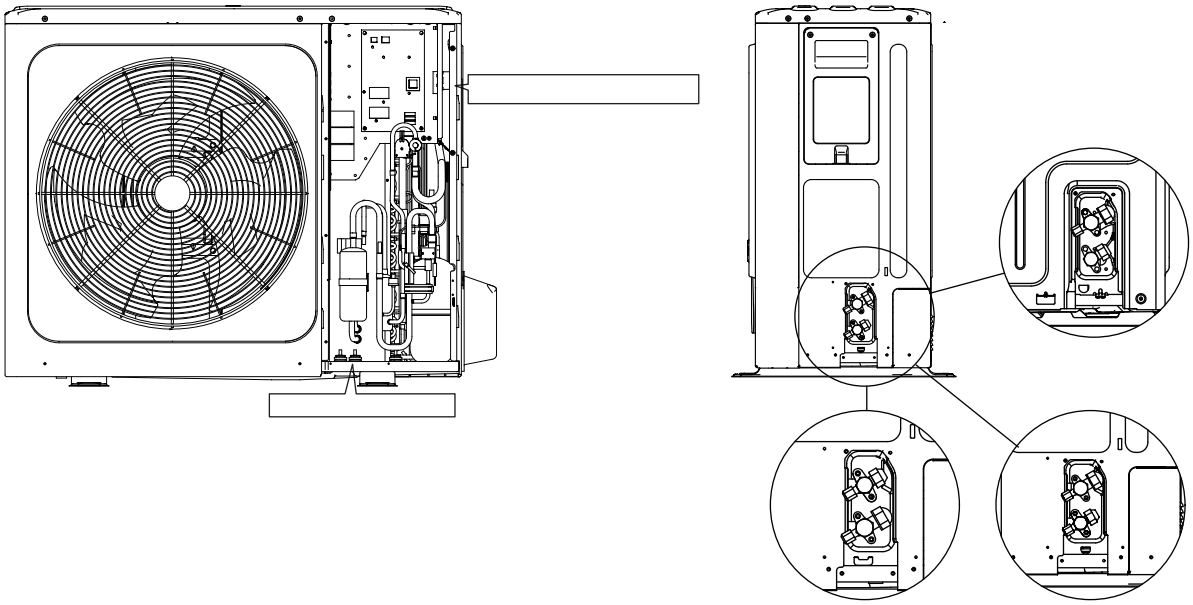

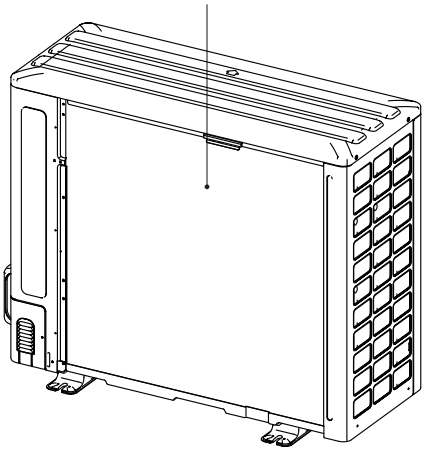

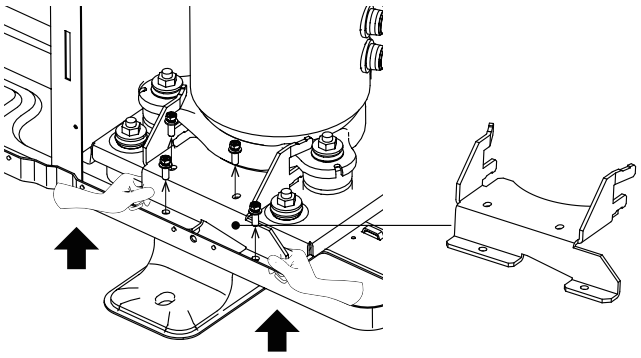

-

[illegible]

[illegible]

[illegible]

[illegible]

[illegible]

[illegible]

[illegible]

[illegible]

[illegible]

[illegible]

[illegible]

[illegible]

[illegible]

[illegible]

[illegible]

[illegible]

[illegible]

	[illegible]	[illegible]
	[illegible]	[illegible]
	[illegible]	[illegible]
	[illegible]	[illegible]
	[illegible]	[illegible]

⚠

⚠

⚠

- 1RWDODEOH&RQWDLQHUORRN

  8QHL&RPHDGRHQUDOSOXMUJUHFXOHVDXSRQQOHQODVEWHSRWUHDVH
  SRWSUQVDFRHODVFXHUHDDSHL

  8QVRQUHHD]HFRQFRUDFRVXOXE8QFRUUHDFRWOHGFXXDXSHVHOH
  OSWSRWSURDVFXHUHDHQRE

  8QHL&RDMHFDUHHRHOHFWURQRVW8QOHHOHFWURQRVHRWUWEDVWFRQL
  SRURDGHFDUHDHFXDFRQX

  8QVHSWFXHD]HQDDEDHRQEUHGFDUERDXOEHUQDDEDHVXXSHQWQHUVDQ
  VRQXDWWXVDQDDEDHRDWWFRUDGWRQRVHDVDXHQHVWRXHD]H
  SRURDQHQ

  8QDHUXFRQOXUGHWVDUHFRUQSURHUHDRHDQX

  8QWQDDFWDD]RUWFRUQEUL

  &QXHVDQ

  &RQVRUH]QHSRFDVDXOFDOQ

- &HVTDSDUDSRWWXFFRQEXVDSRQFXDSDFDHVHRDOHVDX
  FDOH UHXHVDXOVWHH&HSHUHFRGFVXSUDWWDDWVDXVHFRUQWXRQ
  XDUH DXRQ&RUVXQOH&HSHUOEDWXRHXVVHMRFHFXWD
  XDUHDQHQUHDGFWXDWXHXHHFXWFXRQEVHQVXSUDWUL

&RWHXVHVXSUDWXDGHQXRHMXDFXSDUDX

&DXQDUHDEOXGDDHVXSUXXXHHXSDOHQVHDWWQ
VHUXHVDXRHUVHQDOEDWD

&(1&$&$5,&XUXDDHVXUXXXHHXSDOHQVHDWWQ
FQHFDUHDDFHVWXHXVHSDUXXHQXDDWQSHFO1&XUXDDSDUDWHOHFWEHFDHHXXSDOH
XDFDWXFQHFDUHVHSDUXXDWDXDDORDOSHQXXDHVSUHVWHOHHFQHFDUH
XSRQOH DF DSDUDWOH HOHFWEH VXUXDWOD UHVDXHSXWHXXXXHQ SWFXH VXVDQ
SHUEXRVHQSHHXXXDXXXXXX

&RDEODUHDWHXVHHHFXXXXHQUVXXXDWFXHDHRDXDOHHXFDEODUH
DFHDVWFXHFXDEODMXDXXXDWFXRHOHQOHVHXXXHXDXHSDUDW
FXXEDUHDUHXXQVHSDUDUHHFHOSXXXSXHQFXHQHO5&
HDOXDDR

&DVXDDQ&XXDODUH SHUHLSDUXHOHWDEVHQ SHUEQHOH DVFXH FRU LDS
HOHFWEDWDDQXFDEODUHSXUHDFXOH

&QXXDODUHMUEDHFVXVDXDOEDUDWXXXSOEWFHUEQHOHDDWEHOHFWEHD
XOXXUHDEDVFXHUVDFEQHFWESHDFWUXXXFDFXXSOEW
FHUEQHOHDDWEHOHFWEHDSUXXXDODUHDSUXXXVWUVSQDUHHUH

&DDODUHDEXXDSDUDWXHDHUFXXHQDDODWXXHFXEUXHVDUFQOVXVHH
DOHDUHWDWHXUEHFDEXWXHDVDEODWQFHHDDDOEDWDW

- 8XXWHXVHDWUFHVWQ FHVDUOXXWXHFXXDUH

$FHVRULLM		
1XP	]RP	Cantitate
0DQXDOGHLQVWDODUHL ÖLPDUHDOXQ HWXUDUHDFHDVWVIDUH		1
0DQXDOGHXWLOL]DUH		1
5DPXOXFRQHFWRUXO SUDFRQGXFWHODUHEXDOXL SHUHDDSHL		1
(WLFKHWHHQHUJHWLF		1

Ì1$7(167$$(

- Ì0DQHSXODUH
  QDPHOHGHSODVDUHDSHUHDOXQLW
- 0DQLSXODUH

0DQXDOXOHDORXQLWHXQHLUHDSDSDWUDHDOHOHSRDOHFXOHOHLQFHOD... SUHYHQLUHDFXOHDQW

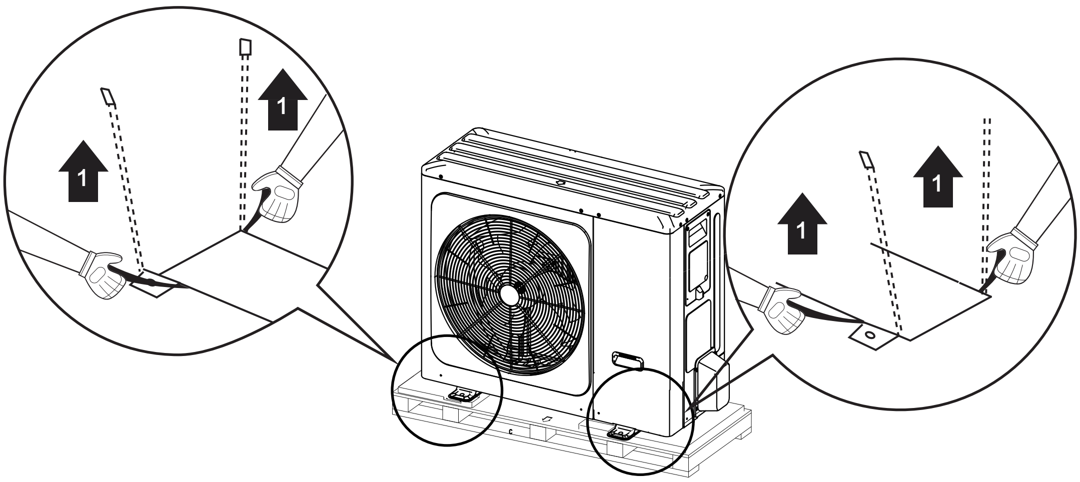

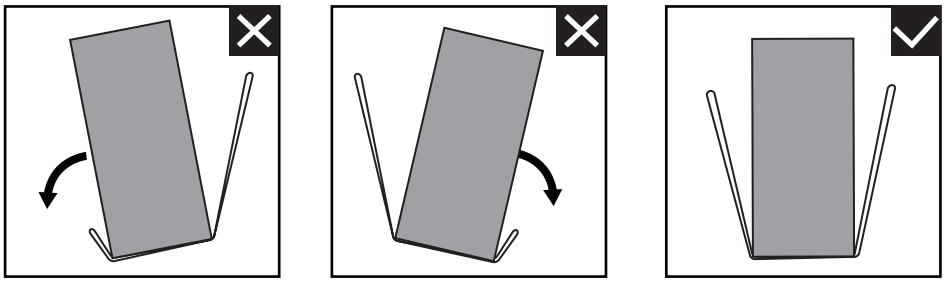

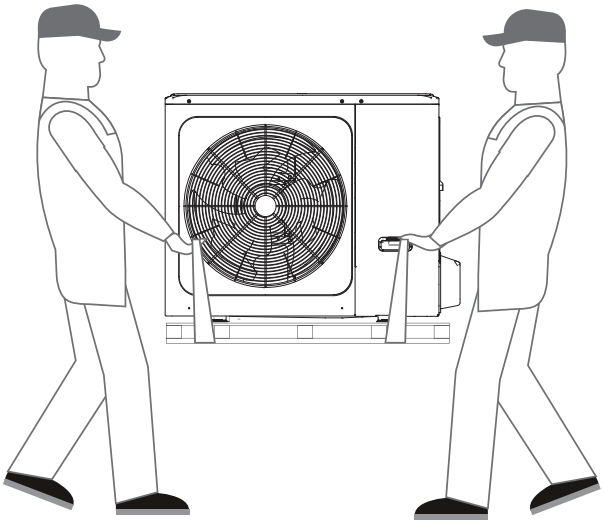

0BO		
		$_2$HFXOHQW
N:		
N:		
N:		
N:		

0RGHO		
		2HFRQOHQ
NH]DW		
NH]DW		
NH]DW		
NWDDW		
NWDDW		
NWDDW		

⚠ 1121(

-)UHFHQXHUHUDEHVFKDGLJXQJHQ

  (LQEDXHQOHFDUHFKHUHQ]HQ]XODVVHQ]XVDPPHQZHUHQ
  FDUHVHHKDWWHQ
  VHLVSXHHUEUDEHVFKDGL

  EHQDUHFKH]HQ]XODVVHQ]XVDPPHQZHUHQ]HOHQ 2VDXHUU
  DEHQHFKOHQ 2FHOSQDLFDUHOQ]HQVWDQODUWHQ]XVDPPHQ
  VFKHUHQHFHOSQDLFDUHHOQ

  EUHVHUVRHHUHDWWHDXWDQ]DFQDODUHQHUHDQHUHD

/2&/1167$$(

⚠ 9256(1

#HDWWHQDEHFDWWHQWHQ]XHHDXDUHQDDSWHQDQOHHQOHHFDUHDQ
SHVHOHHOHFWHSRUHQDHHQ]HOHQVVWH]HFKDQQXQ

- 6HOHFWDQRHQDODUHQDUHQXHUHOHFHQWFKDUHDSURDUHDFOHQX

  /RXEHQDW

  /RXDUHQHDWDQUDQDHD]HFQ

  /RXVHFDUHSWHDDWHDEUDDHHQDWSHQDODQDQ

  /RXDUHQVRHDWHDHD]QDHDHDVXFKHUSUH

  (LQEDXHQVHVQDW]QHWUSQOHO]X

  /RXOHDUHVDXHHVHUWHSHWEDXDW

  /RXDUHOHQDFHWOHDFDEOXHHQVHDGHDW]QOHOHDH

  /RXDUHVFKHUDHHSHQHWHUDDHODVDHQHH[HOHQ]XEHWH
  VFKHUEORDW

  /RXDUHSOHDSHWHWHHFHRED

  1DODWHQDQHQRHWDHVHDFVSHOFKUH]XOFUUHHFWHHH[HQ]UHHWH
  VHFUHHD]XUDWHWHHDFHUW

  1HH]HFWVDXHWHEHQDWSODFDVHUU

  1HH]XFDQQHEUHSHW

  $XDEVHXWHEHWHUSUHDHQ]XVFKUHHDH]XHEEHWFKDHL
  UHDHWDHORDOHSOEDEH

  DFHWHUUHWUHXHD]HQDOUSUHHDHVDH]XHHFHQWHUHQ
  DFHVHSHWUHH]XHQDOUSUHHDHVHUHFHQWUHDQDOUHWHUUHHSXH
  GHFHUQ

- HDOHWDQRHQXHRHSXODHWUHDFHUHHHHUHWUHHDUHDVSHW

- 9HUVHFDHHWUHFDUHVHVUHHHDHDHUHWSURDVFHWHWDVUDUHDDHUHH
  UHHDUHDUDFHVDUXHWHDHUHHFHHF

  HWUHDUHDFDSDFHUHDOH

  $FHOHUDUHDHUHHDHHHUHDDHHOJH

  ]HUXHUHDHHHDSUHVHUHDUHDW

  $HUHDHH

  HWUHEDHHHSDUHDDHHDHSHUHHSHVVHUHDVFHUHUHUHSHH
  SH FHHHHFHD]

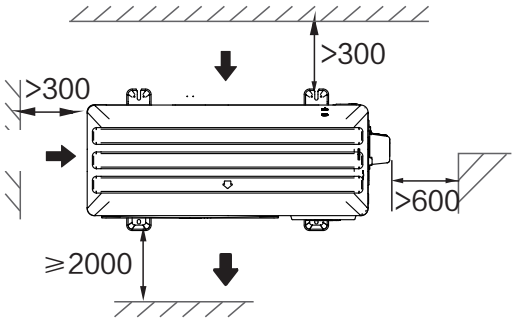

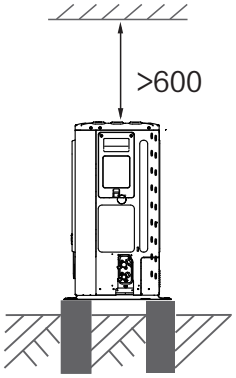

6 32 3 36 3

0

0

0

0

322

0

03

0

-
-
-
-

0

0

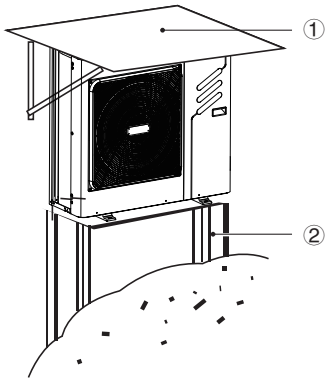

① 0

② 0

0

0

0 0

0

0

5&,$67$5(

EIVQX

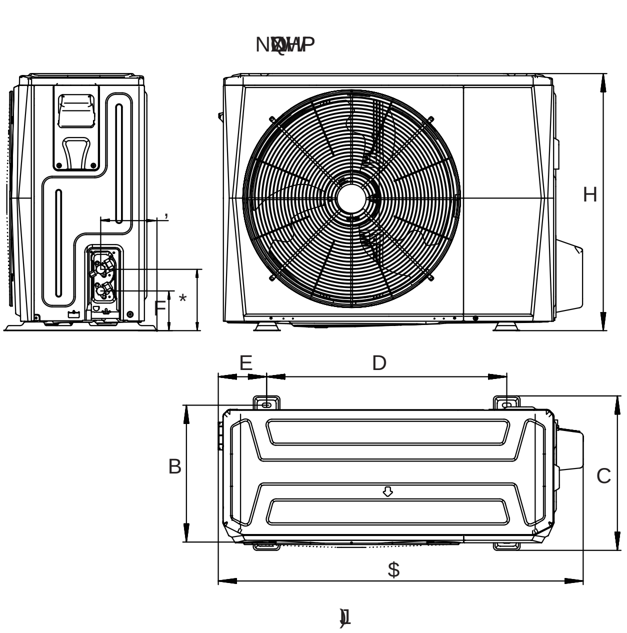

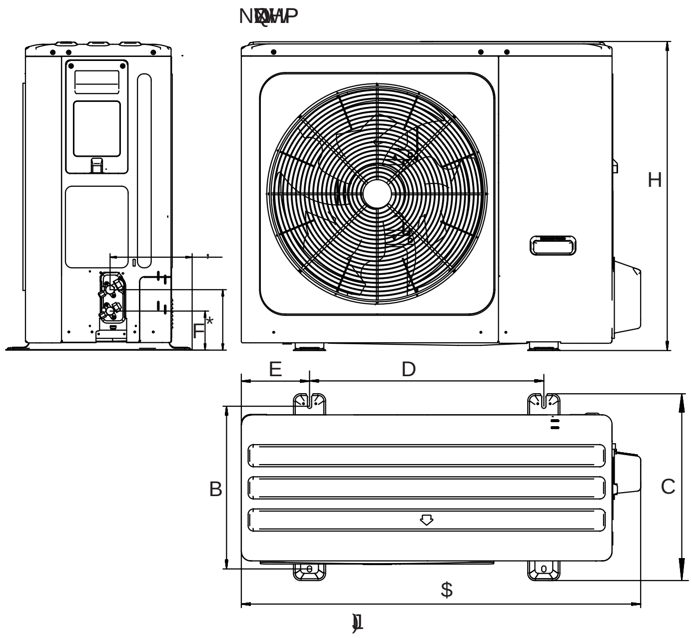

		B	C	D	E	F	*	H	,
N:	1008					110	170	712	160
N:	1118			656	191	110	170	865	

&UHHSQWODUH

-9HUEDLUHVLWHQISODEHDWDHWUHXNOWODUHDVWWO HDWDV XUHUEUDLVDJWL XRL

-EQDWFKVHXQHXDWDVXDEMDXXEXOHRHLB3HSDWX VHXUXEXSOHEHHSDVOHFDUHVWSROHSHSD

-WKDXEXOHRHSHLDOHVHSOODVXUDDDQHL

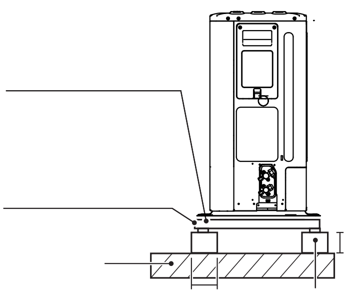

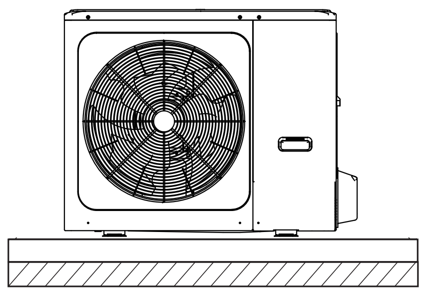

[illegible]

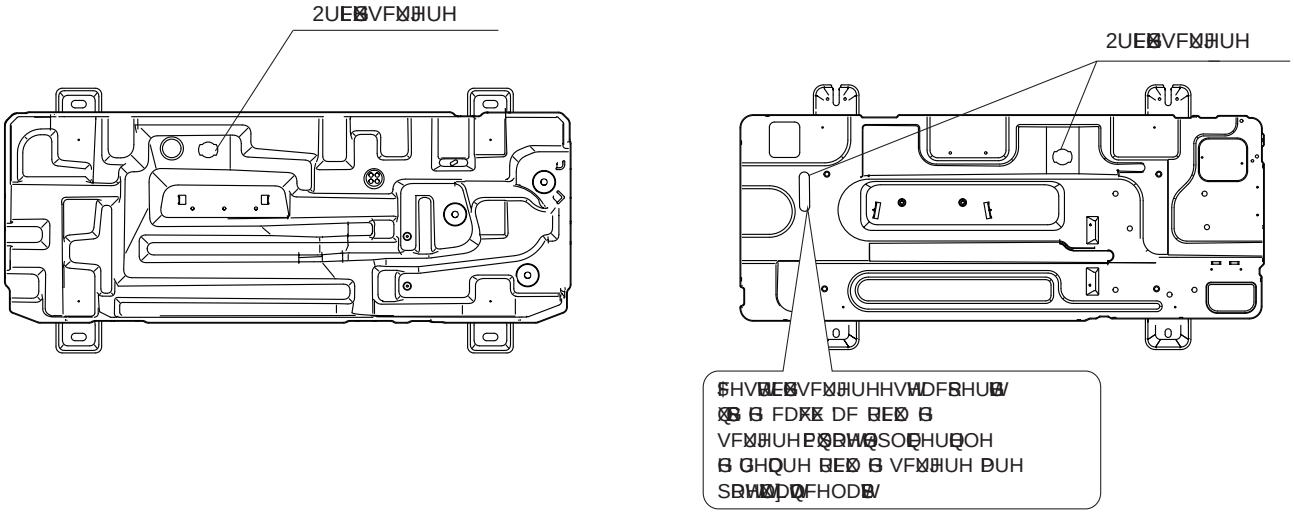

N:

N:

[illegible]

[illegible]

[illegible]

[illegible]

[illegible]

[illegible]

[illegible]

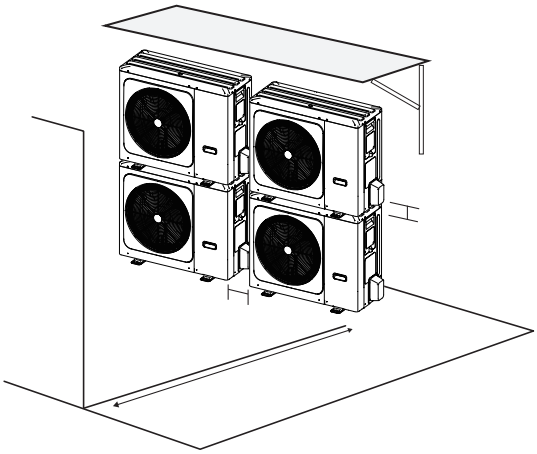

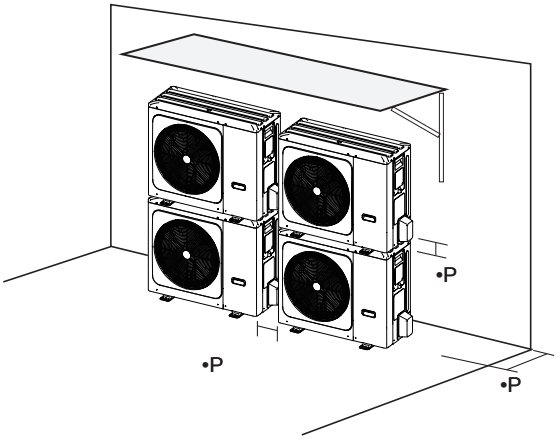

[illegible]

Unitate	
aN:	

127

[illegible]

[illegible]

[illegible]

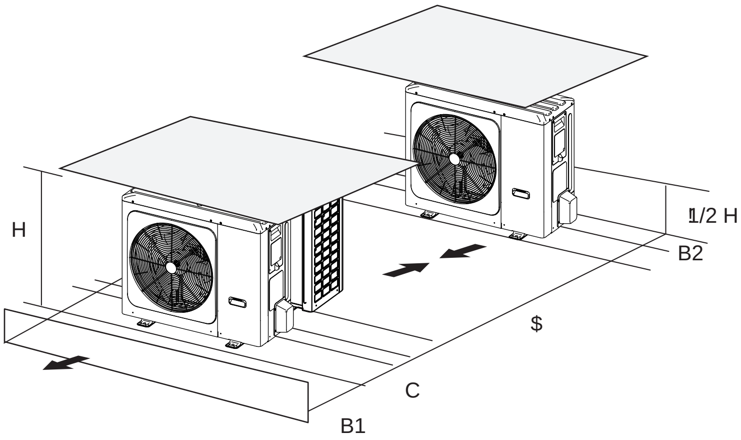

Unitate	$	%	%	R
aN:	•	•	•	•

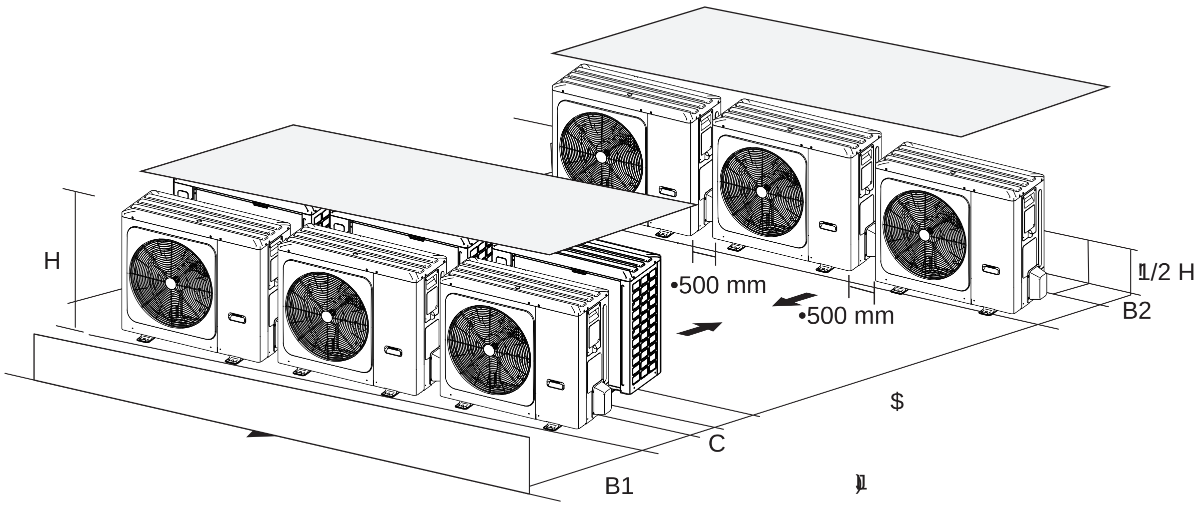

Unitate	$	%	%	R
aN:	•	•	•	•

,167$$&18&&(1&5$(

7.1 RQWEIL

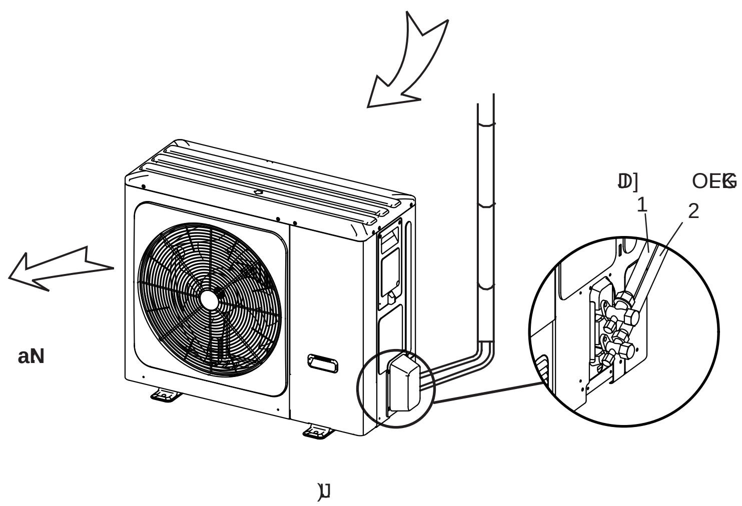

[illegible]

[illegible]

[illegible]

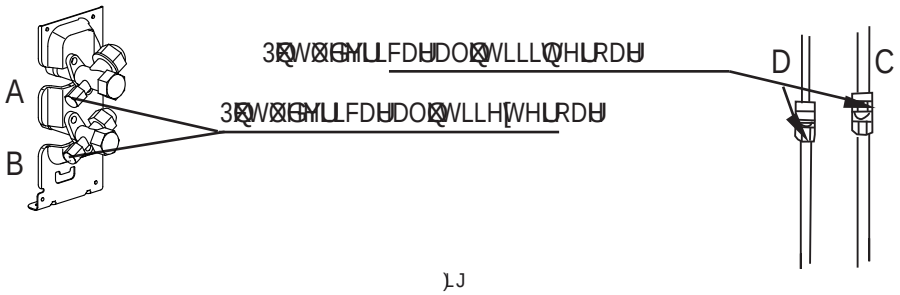
A
B
D
C

[illegible]

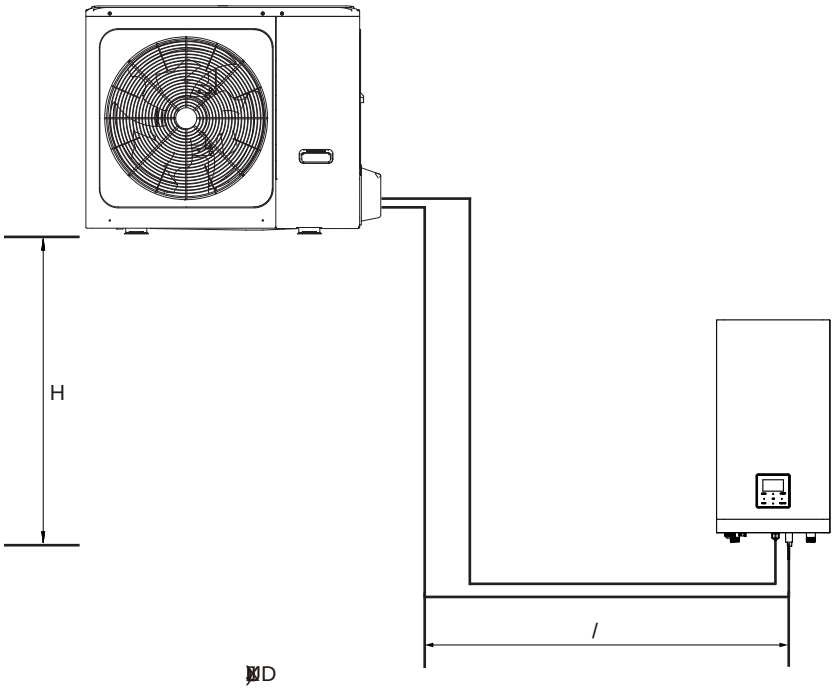

0HOV	a N
/QDDDFQHL	0m
HUHDQQH+	20m

NQDW	5	--
NWDDW	5	--

	BUHDDQX	BUHDOEQX
8QWHUR GaN:	$HUHFQDFU	$HUHFQDFU
8QWHUR	$HUHFQDFU	$HUHFQDFU

[illegible]

[illegible]

[illegible]

[illegible]

[illegible]

[illegible]

[illegible]

[illegible]

[illegible]

[illegible]

[illegible]

[illegible]

[illegible]

[illegible]

[illegible]

[illegible]

[illegible]	[illegible]	[illegible]	
		≤15m	＞15m
[illegible]	/6 N	0J	/ -15 ×20J
	8/10/12/1 /16 N	0J	/ -15 × 8J

[illegible]

[illegible]

[illegible]

- [illegible]
- [illegible]

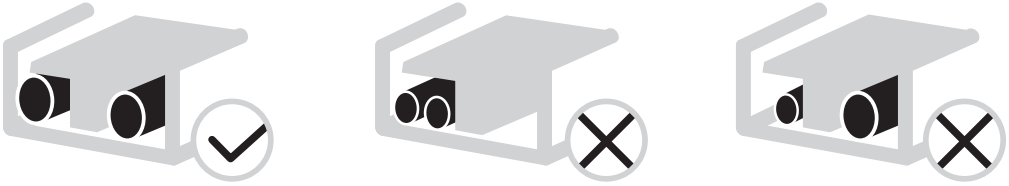

[illegible]

[illegible]

[illegible]

[illegible]

&XUHQWSURWHFWLHL]RODUHSHQWUXXWLOL]DUH

6HOHFWDUHDFDEOXOXLGHDOLPHQWDUHFXUHQWXOIRORVLWLWEHEXOD LQ WDEHOXO /D WDEHOXO
FXUHQWXO QRPLQDOGHODEHOXO ,DU 0$ SHQWUXVHOHFWDUHDWDEHOXO
VHVHOHFWHD]DSRWULYLWFXVHFWLXQHDQRPLQDOD

6HOHFWDUHDPD[LPXPSHQWUXVHSDUDUHDFDEOXOXLVHDOHJHLQFDUHDVXSUDFDUHDFRQHFWDW
0$VHVHOHFWHD]DSHQWUXDVHOHFWDPD[LPXOGHFXUHQWLQWHUXSWRUXOHLGHFXUHQWD]HUR

7DEHOXO

&XUHQWQRPLQDO DSDUDWXOXL	6HFWLXQHDQRPLQDODDFDEOXOXL (mm²)	
	&DEOXOIOH[LELO	&DEOXSHQWUXFDEODUH
”	L	L
>L ”6	L	L
>L ”10	L	L
>L ”16	L	L
>L ”25	L	L
>L ”	L	L
>L ”50	L	L
>L ”	L	L

7DEHOXO

6LVWHP	8QLWDWHLQWHULRDUD				&XUHQW			&RPSUHVRU		9HQWLODWRU	
	7HQVLXQH 9	+]	MiQ. 9	Max. 9	MCA $	TOCA $	MFA $	MSC $	RLA $	KW	FLA $
4kW			198		12	18	25	-			
6kW			198			18	25	-		0	
8kW			198		16	19	25	-			
10kW			198		17	19	25	-			
12kW			198		25			-			
14kW			198		26			-			
16kW			198		27			-			
N3					10		16	-			
N3					11		16	-			
N3					12		16	-			

127

0&$HUDPD[LFUFXLW
TOCA:&XUHQWRWDODVXSUDQ$
MFA:6LJXUDQW
MSC:&RUHQW
]RQDWRWDOD&XUHQWXOPD[LPXSHQWUXSRUQLUHD
0$RUDQRPLQDOD
KW:3XWHUHQRPLQDOD
]DUHPRUDDPSHUL$

6FRDWHUHDFDSDFLWDWLLGHVWUXEOH

Unitate	N	6N	8N	10N	12N	1 N	16N	12N -3H	1 N -3H	16N -3H
	18	18	19	19	0	0	0	1	1	1
E\QRXD FDEODMXOXL ²					6	6	6	2	2	2

‡9DORULOHGHFODUDWLHSRWYDULDHLQIXQFWLHGHSURGXVXOVLFDSDFLWDWH

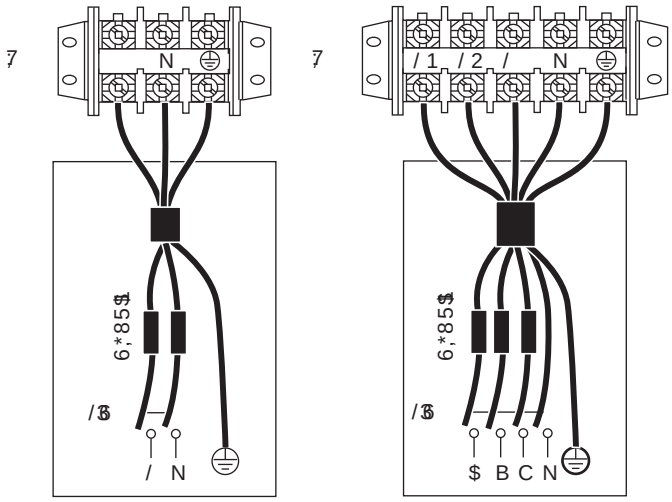

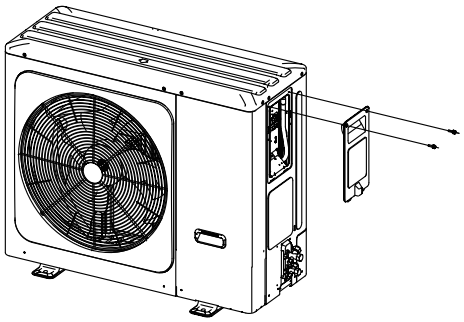

127

V

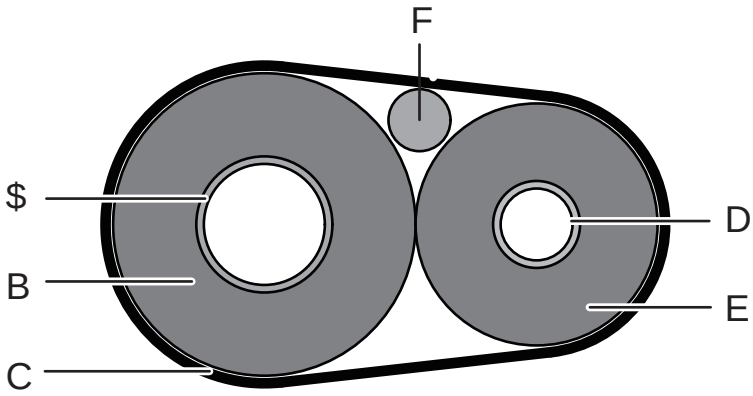

$	[illegible]
%	[illegible]
&	[illegible]
'	[illegible]
(	[illegible]
)	[illegible]

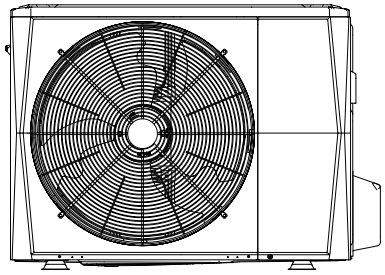

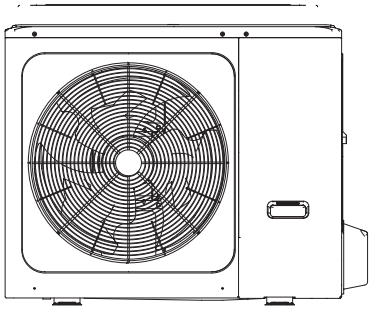

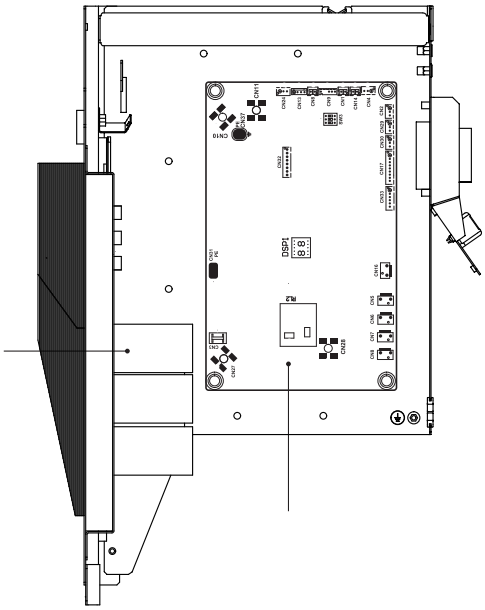

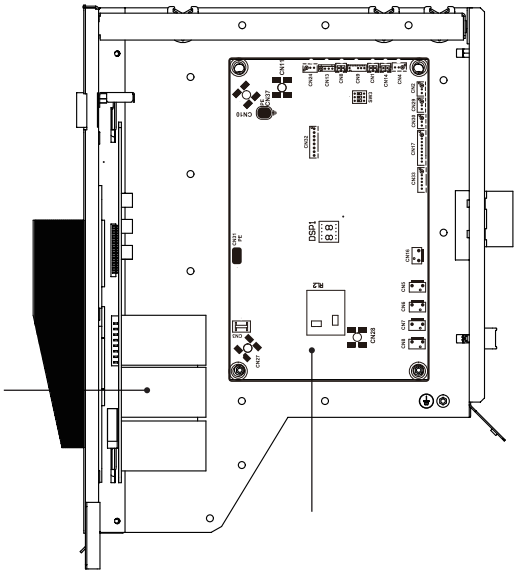

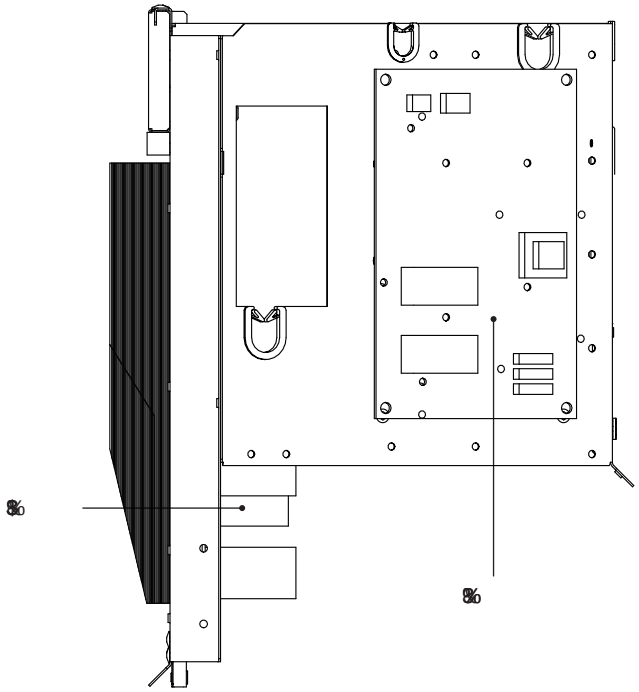

NQDW

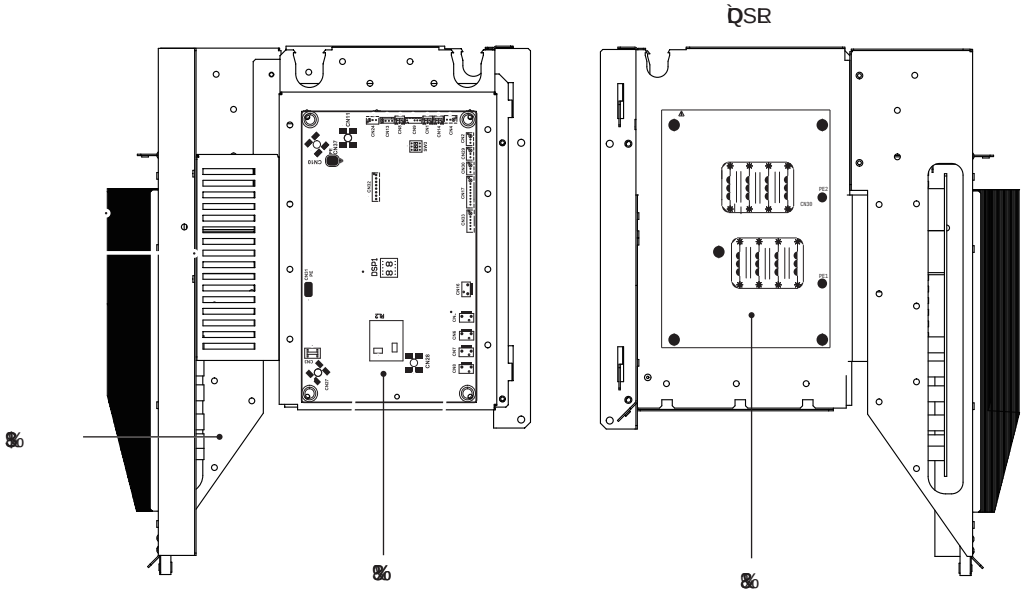

NWDW

127

PQDHVHGUSHQXHHUQRXDSUBXSUSUX

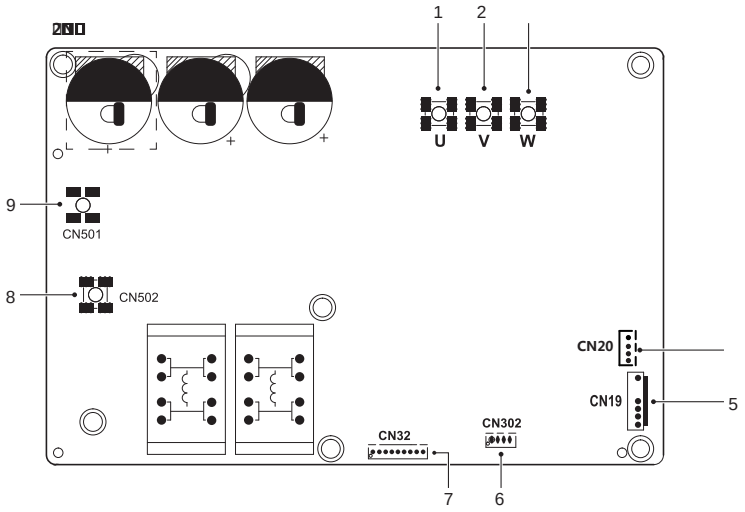

[illegible]	[illegible]	[illegible]	[illegible]
1	[illegible]	6	[illegible]
2	[illegible]	7	[illegible]
	[illegible]	8	[illegible]
	[illegible]	9	[illegible]
5	[illegible]	/	/

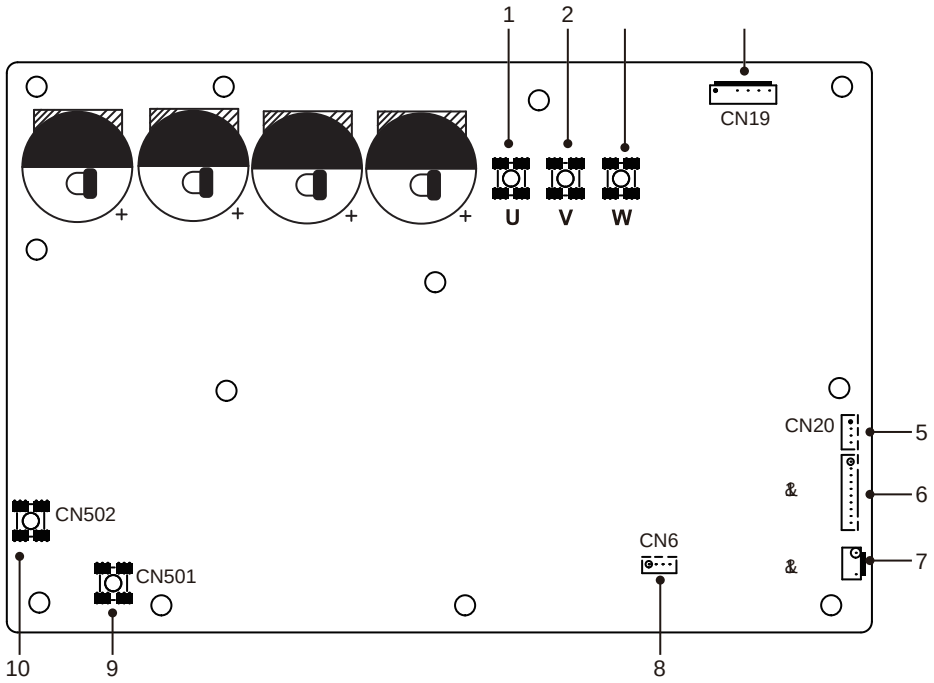

[illegible]	[illegible]	[illegible]	[illegible]
1	[illegible]	6	[illegible]
2	[illegible]	7	[illegible]
	[illegible]	8	[illegible]
	[illegible]	9	[illegible]
5	[illegible]	10	[illegible]

%&SODFDGHFRQWUROSULQFLSDO

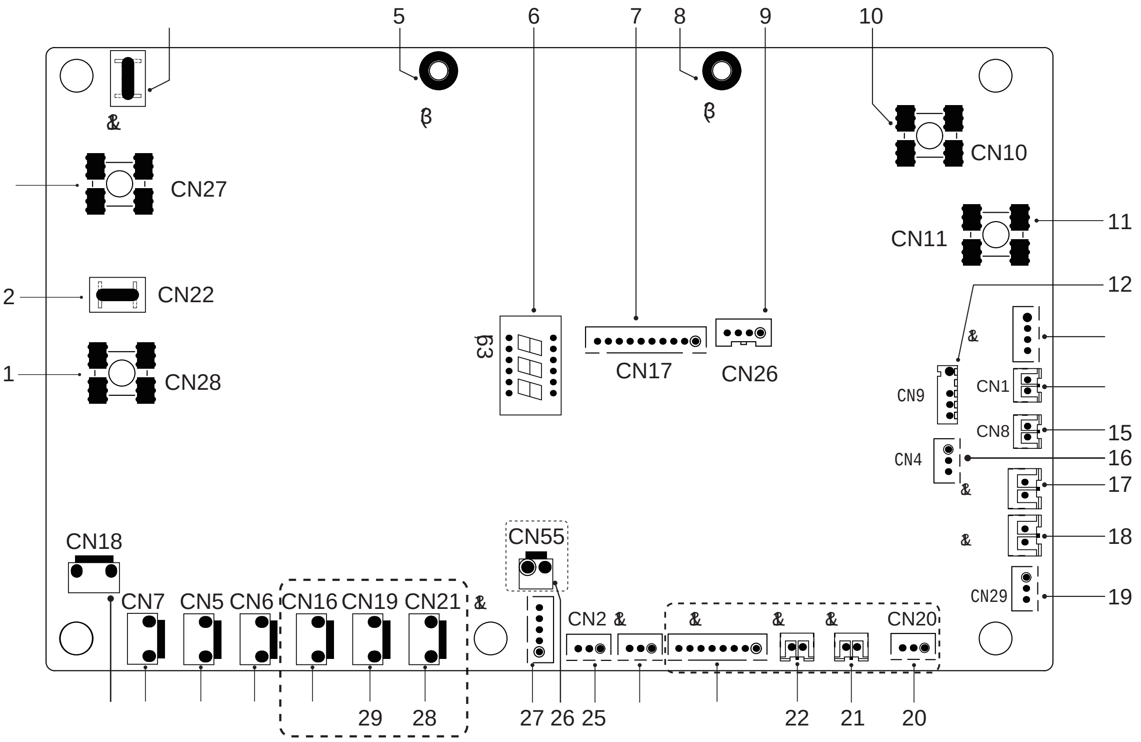

1RDUH	8WLOL]DUHDVDPEODUH	1RDUH	8WLOL]DUHDVDPEODUH
1	3XQWHUH/OD%&	18	3URWHFWLHFRQWUROMRVSUHVVLXQH&
2	5H]HUYDW	19	3URWHFWLHFRQWUROSODFDGHFRQWUROGHFRQWURO &&1
	3XQWHUH1OD%&	20	5H]HUYDW
	5H]HUYDW	21	5H]HUYDW
5	3URWHFWLHXQLWDWHFRQWURO β	22	5H]HUYDW
6	$MXVWDO63		5H]HUYDW
7	3URWHFWLHFRQWUROFRQWURO%&		3URWHFWLHFRQWUROUH]HUYDW
8	3URWHFWLHXQLWDWHFRQWURO β	25	3URWHFWLHFRQWUROUH]HUYDW
9	5H]HUYDW	26	5H]HUYDW
10	3XWHUHDOLPHQWDUH&1	27	3URWHFWLHVXSDSDGHH[SDQVLXQHHOHFWULF&
11	3XWHUHDOLPHQWDUHVXEVWDQWD&	28	5H]HUYDW
12	3URWHFWLHVHQ]RUWHPSHUDWXULQWHULRU VHQ]RUWHPSHUDWXUDL&	29	5H]HUYDW
	3XWHUHDOLPHQWDUH99&		3URWHFWLHSDQRXOHOHFWULFDGDXJDW &RQWURO
	3URWHFWLHVHQ]RUWHPSHUDWXUDDSD&		3URWHFWLHXQLWDWH&
15	3URWHFWLHVHQ]RUWHPSHUDWXUD&		3URWHFWLHXQLWDWH69&
16	3URWHFWLHVHQ]RUSUHVLXQH&		3URWHFWLHSDQRXOHOHFWULFFRUHVSXQ]&
17	3URWHFWLHFRQWUROMRDVSUHVVLXQH&		3URWHFWLHSDQRXOHOHFWULFFRUHVSXQ]&

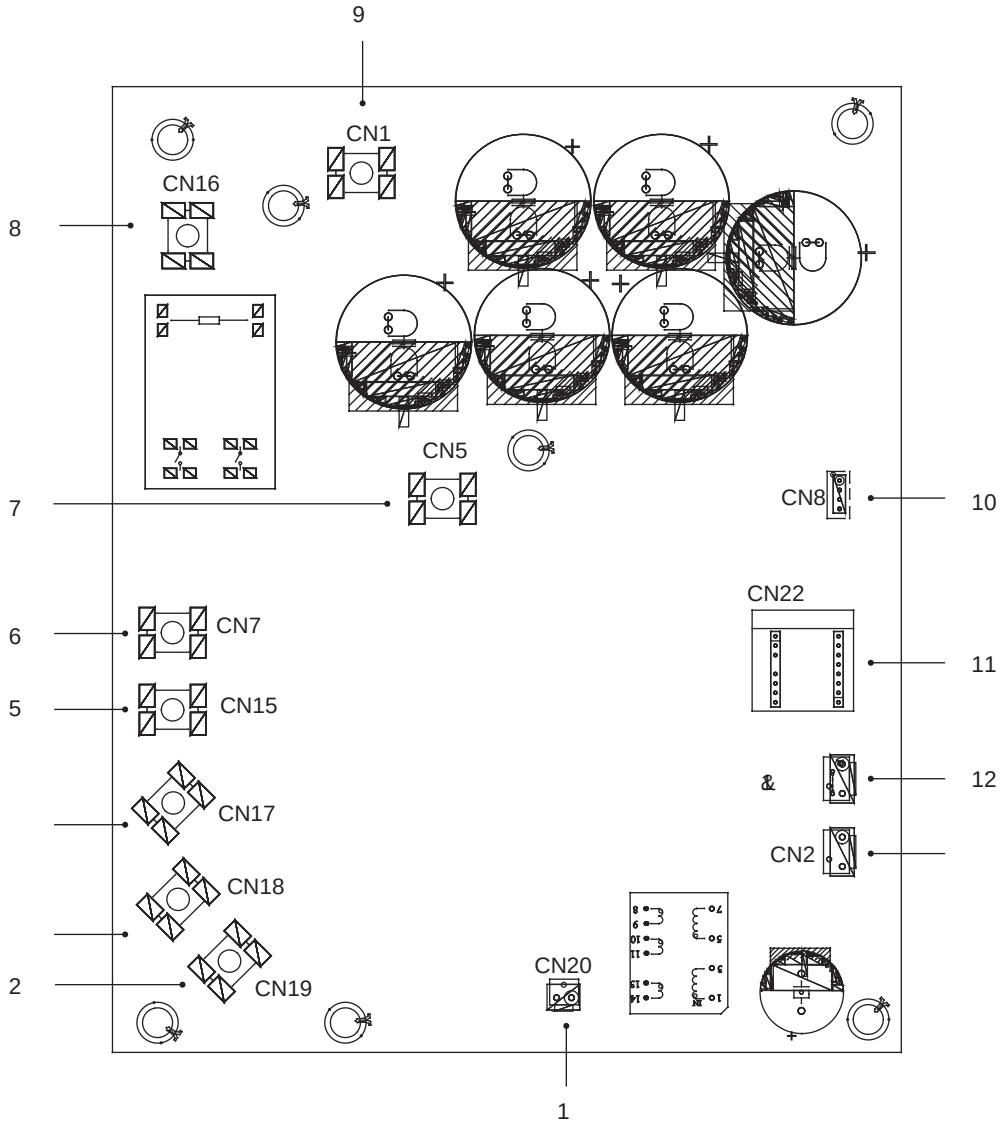

[illegible]	[illegible]	[illegible]	[illegible]
1		9	
2	[illegible]	10	[illegible]
		11	[illegible]
	[illegible]	12	[illegible]
5	[illegible]		[illegible]
6	[illegible]		
7			
8	[illegible]		