OMNIA UE 3.2

UNITÉS EXTÉRIEURES POUR POMPES À CHALEUR RÉVERSIBLES
BUITENUNITS VOOR OMKEERBARE WARMTEPOMPEN
JEDNOSTKI ZEWNĘTRZNE DO REWERSYJNYCH POMP CIEPŁA
UNITĂȚI EXTERIOARE PENTRU POMPE DE CĂLDURĂ REVERSIBILE

Cod. 3QE46800 - Rev. 0 - /2021

FR MANUEL D'INSTALLATION ET D'UTILISATION

NL INSTALLATIE-EN GEBRUIKERSHANDLEIDING

PL ,1675.&0217$2%8*;

RO 0$18$(167$$87/$$

CUPRINS

1 &216,$5591,685$$ 02

2 ACCESORII 05

- $FHVRULLQWHFQLFD 05

3 ÌL$71(167$5(........ 05

4 ,1250$3257$17$35,1$578/2$5$& 05

5 2&1675(........ 07

- 6HOHFWDUHDORXXOXLEHOHUHFL 08
- 3WMDUHDSHDVRUHOL 08

6 35($167$5(........ 09

- EQX 09
- &XUHSHQDODUH 09
-]RRPXVFXUHH 10
- &XUQSUQSDUHSQODUH 10

7 ,167$5(&$18&7,21$5(........ 11

- 8VDHSQHE 11
- HWFDUHDVFXUHLOR 12
-]DHWUP 12
- MHWWSFQFDUH ....
- ÌQSUDRGDVDSDUDW ....
- 7HVDUHDHWDL ....
- XMDUHDDHUXEXURDEG ....
- QWHSDEHQLEDW ....

8 8$1775(5$(........ 15

- 3HFDEXULXHODOFXUOHDVRDWHFDEOXOHHOHFWLH 15
- 3HFDEXULXHODFDEOXOHLSDOHDQ 15
- &XUHSURSVJDVDQ 16
- 6FRDWHUHDFDSDFXOXLELDWLEX 16
- 3QRDQDUHDWDOUWHURUH 17

9 35,95,(6896835817, ... 17

- HQUHDQV 17
- XSFRQOHFWRQ 18
- 8QDWHaN: 20
- 8QDDWHaN: 22

10 76758355, ... 25

11 35&Ì&&55(78852& 25

12 35&&5&7 26

13 8121535250$ 28

- FKDHQSUWFH 28
- HVSUHQHUXHUHDDOHQEHQUH 28
- &SDFDWHQOUH 28
- &DSUWFHDFRUHVRXX 28
- 2SHUDUHDQSUFUHQOUH 28
- &UDFWLWDOHQQQSQOUH 28
- HYDUHDQXQQSQOUH 28
- &HURUH 29

14 63&&& .....

15 1250$59,(6595$ .....

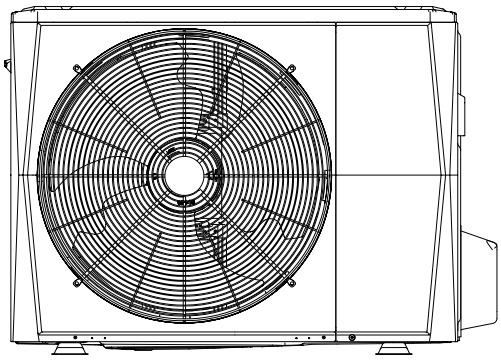

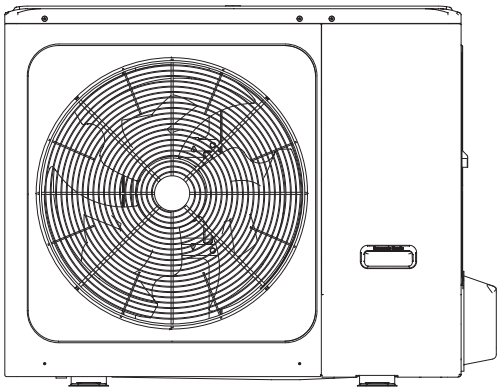

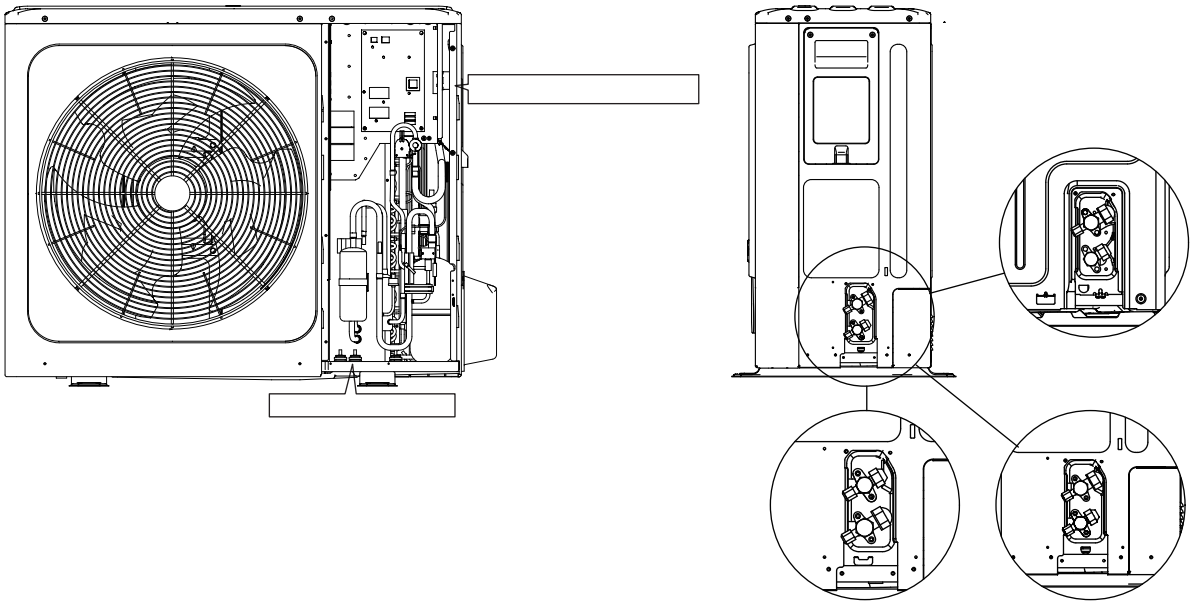

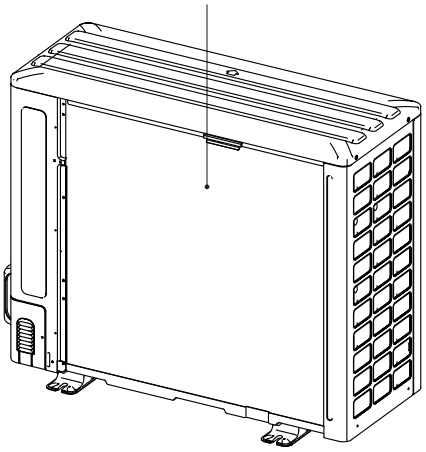

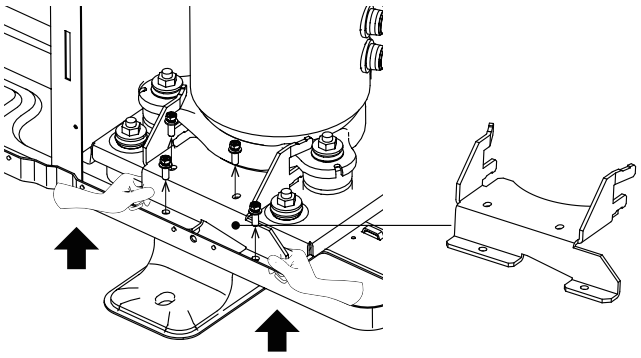

-

[illegible]

[illegible]

[illegible]

[illegible]

[illegible]

[illegible]

[illegible]

[illegible]

[illegible]

[illegible]

[illegible]

[illegible]

[illegible]

[illegible]

[illegible]

[illegible]

[illegible]

	[illegible]	[illegible]
	[illegible]	[illegible]
	[illegible]	[illegible]
	[illegible]	[illegible]
	[illegible]	[illegible]

⚠

⚠

⚠

- 1RWDODEOH&RQWDLQHUORRN

  8QHL&RPHDGRHQUDOSOXMUJUHFXOHVDXSRQQOHQODVEWHSRWUHDVH
  SRWSUQVDFRHODVFXHUHDDSHL

  8QVRQUHHD]HFRQFRUDFRVXOXE8QFRUUHDFRWOHGFXXDXSHVHOH
  OSWSRWSURDVFXHUHDHQRE

  8QHL&RDMHFDUHHRHOHFWURQRVW8QOHHOHFWURQRVHRWUWEDVWFRQL
  SRURDGHFDUHDHFXDFRQX

  8QVHSWFXHD]HQDDEDHRQEUHGFDUERDXOEHUQDDEDHVXXSHQWQHUVDQ
  VRQXDWWXVDQDDEDHRDWWFRUDGWRQRVHDVDXHQHVWRXHD]H
  SRURDQHQ

  8QDHUXFRQOXUGHWVDUHFRUQSURHUHDRHDQX

  8QWQDDFWDD]RUWFRUQEUL

  &QXHVDQ

  &RQVRUH]QHSRFDVDXOFDOQ

- &HVTDSDUDSRWWXFFRQEXVDSRQFXDSDFDHVHRDOHVDX
  FDOH UHXHVDXOVWHH&HSHUHFRGFVXSUDWWDDWVDXVHFRUQWXRQ
  XDUH DXRQ&RUVXQOH&HSHUOEDWXRHXVVHMRFHFXWD
  XDUHDQHQUHDGFWXDWXHXHHFXWFXRQEVHQVXSUDWUL

&RWHXVHVXSUDWXDGHQXRHMXDFXSDUDX

&DXQDUHDEOXGDDHVXSUXXXHHXSDOHQVHDWWQ
VHUXHVDXRHUVHQDOEDWD

&(1&$&$5,&XUXDDHVXUXXXHHXSDOHQVHDWWQ
FQHFDUHDDFHVWXHXVHSDUXXHQXDDWQSHFO1&XUXDDSDUDWHOHFWEHFDHHXXSDOH
XDFDWXFQHFDUHVHSDUXXDWDXDDORDOSHQXXDHVSUHVWHOHHFQHFDUH
XSRQOH DF DSDUDWOH HOHFWEH VXUXDWOD UHVDXHSXWHXXXXHQ SWFXH VXVDQ
SHUEXRVHQSHHXXXDXXXXXX

&RDEODUHDWHXVHHHFXXXXHQUVXXXDWFXHDHRDXDOHHXFDEODUH
DFHDVWFXHFXDEODMXDXXXDWFXRHOHQOHVHXXXHXDXHSDUDW
FXXEDUHDUHXXQVHSDUDUHHFHOSXXXSXHQFXHQHO5&
HDOXDDR

&DVXDDQ&XXDODUH SHUHLSDUXHOHWDEVHQ SHUEQHOH DVFXH FRU LDS
HOHFWEDWDDQXFDEODUHSXUHDFXOH

&QXXDODUHMUEDHFVXVDXDOEDUDWXXXSOEWFHUEQHOHDDWEHOHFWEHD
XOXXUHDEDVFXHUVDFEQHFWESHDFWUXXXFDFXXSOEW
FHUEQHOHDDWEHOHFWEHDSUXXXDODUHDSUXXXVWUVSQDUHHUH

&DDODUHDEXXDSDUDWXHDHUFXXHQDDODWXXHFXEUXHVDUFQOVXVHH
DOHDUHWDWHXUEHFDEXWXHDVDEODWQFHHDDDOEDWDW

- 8XXWHXVHDWUFHVWQ FHVDUOXXWXHFXXDUH

$FHVRULL		
1XPH	]RUP	Cantitate
0DQXDOSDQWDODUHL WUHDOQ HWXUHDFHDVWDUHW		1
0DQXDOSDWHQH		1
QDPEOXFQLWOH SUDFRUHOHDEHX SHUHDDSHL		1
WKHWHQUJHW		1

1$7167$(

- QDSDQWODUH
  QDPHORHEOXXVHUHDOQW
- 0DQXDUH

0DQVDQWDORFQXHDXQWUXQHDSWUDHELHOHSUDOHFXHOHQFHOPDSHQW SUHVHQVSUHQUHDFXHOHQW

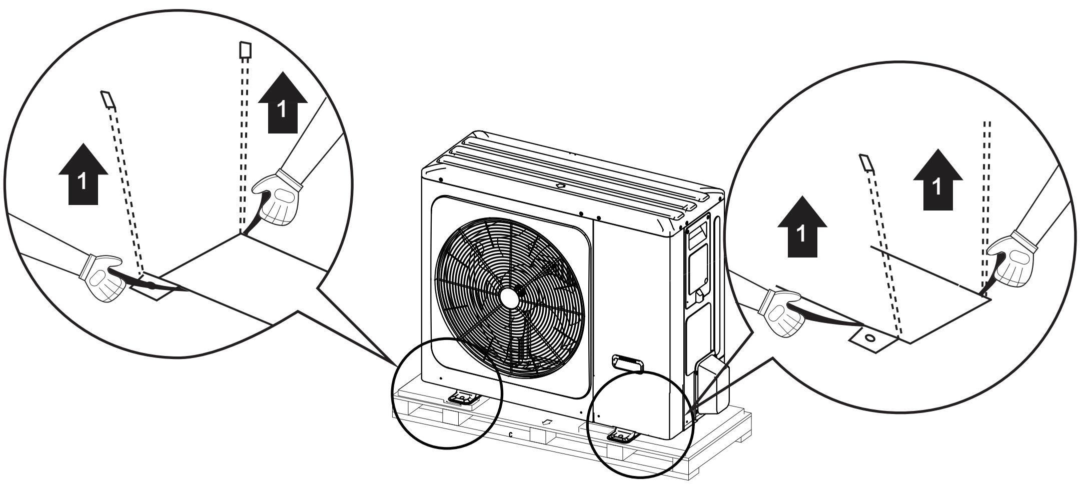

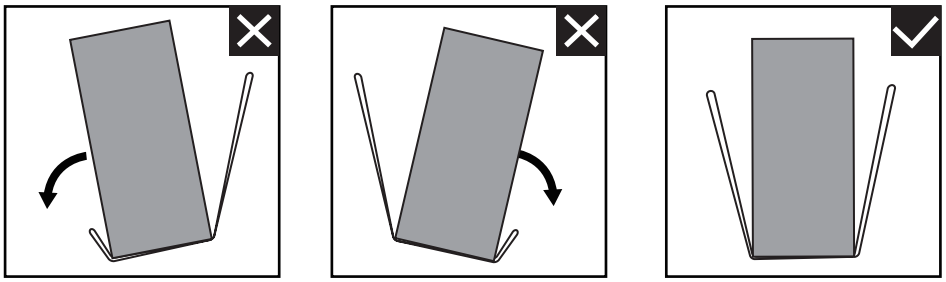

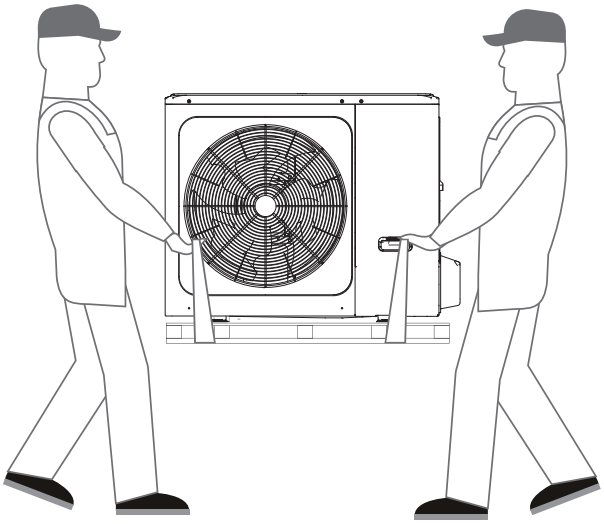

0BO		
		$_2$HFXOHQW
N:		
N:		
N:		
N:		

0RGHO		
		2HFRQOHQ
NH]DW		
NH]DW		
NH]DW		
NWDDW		
NWDDW		
NWDDW		

⚠ 1121(

-)UHFHQXHUHUDEHVFKDGLJXQJHQ

  (LQEDXHQOHFDUHFKHUHQ]HQ]XODVVHQ]XVDPPHQZHUHQ
  FDUHVHHKDWWHQ
  VHLVSXHHUEUDEHVFKDGL

  EHQDUHFKH]HQ]XODVVHQ]XVDPPHQZHUHQ]HOHQ 2VDXHUU
  DEHQHFKOHQ 2FHOSQDLFDUHOQ]HQVWDQODUWHQ]XVDPPHQ
  VFKHUHQHFHOSQDLFDUHHOQ

  EUHVHUVRHHUHDWWHDXWDQ]DFQDODUHQHUHDQHUHD

/2&/1167$$(

⚠ 9256(1

#HDWWHQDEHFDWWHQWHQ]XHHDXDUHQDDSWHQDQOHHQOHHFDUHDQ
SHVHOHHOHFWHSRUHQDHHQ]HOHQVVWH]HFKDQQXQ

- 6HOHFWDQRHQDODUHQDUHQXHUHOHFHQWFKDUHDSURDUHDFOHQX

  /RXEHQDW

  /RXDUHQHDWDQUDQDHD]HFQ

  /RXVHFDUHSWHDDWHDEUDDHHQDWSHQDODQDQ

  /RXDUHQVRHDWHDHD]QDHDHDVXFKHUSUH

  (LQEDXHQVHVQDW]QHWUSQOHO]X

  /RXOHDUHVDXHHVHUWHSHWEDXDW

  /RXDUHOHQDFHWOHDFDEOXHHQVHDGHDW]QOHOHDH

  /RXDUHVFKHUDHHSHQHWHUDDHODVDHQHH[HOHQ]XEHWH
  VFKHUEORDW

  /RXDUHSOHDSHWHWHHFHRED

  1DODWHQDQHQRHWDHVHDFVSHOFKUH]XOFUUHHFWHHH[HQ]UHHWH
  VHFUHHD]XUDWHWHHDFHUW

  1HH]HFWVDXHWHEHQDWSODFDVHUU

  1HH]XFDQQHEUHSHW

  $XDEVHXWHEHWHUSUHDHQ]XVFKUHHDH]XHEEHWFKDHL
  UHDHWDHORDOHSOEDEH

  DFHWHUUHWUHXHD]HQDOUSUHHDHVDH]XHHFHQWHUHQ
  DFHVHSHWUHH]XHQDOUSUHHDHVHUHFHQWUHDQDOUHWHUUHHSXH
  GHFHUQ

- HDOHWDQRHQXHRHSXODHWUHDFHUHHHHUHWUHHDUHDVSHW

- 9HUVHFDHHWUHFDUHVHVUHHHDHDHUHWSURDVFHWHWDVUDUHDDHUHH
  UHHDUHDUDFHVDUXHWHDHUHHFHHF

  HWUHDUHDFDSDFHUHDOH

  $FHOHUDUHDHUHHDHHHUHDDHHOJH

  ]HUXHUHDHHHDSUHVHUHDUHDW

  $HUHDHH

  HWUHEDHHHSDUHDDHHDHSHUHHSHVVHUHDVFHUHUHUHSHH
  SH FHHHHFHD]

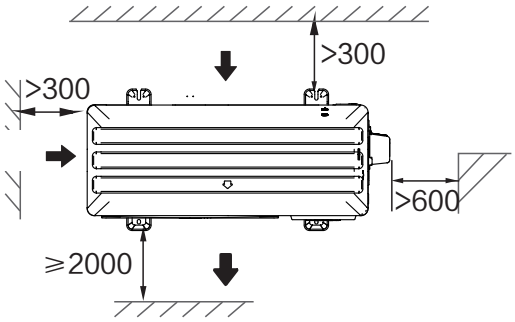

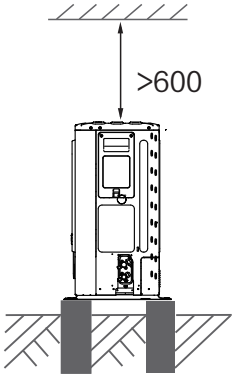

6 32 3 36 3

0

0

0

0

322

0

03

0

-
-
-
-

0

0

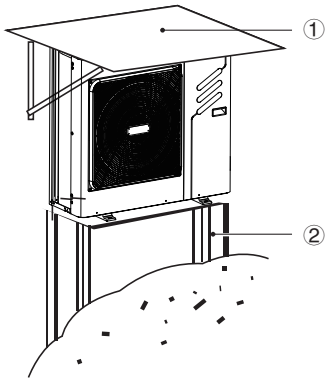

① 0

② 0

0

0

0 0

0

0

5(,67/$(

EIVQX

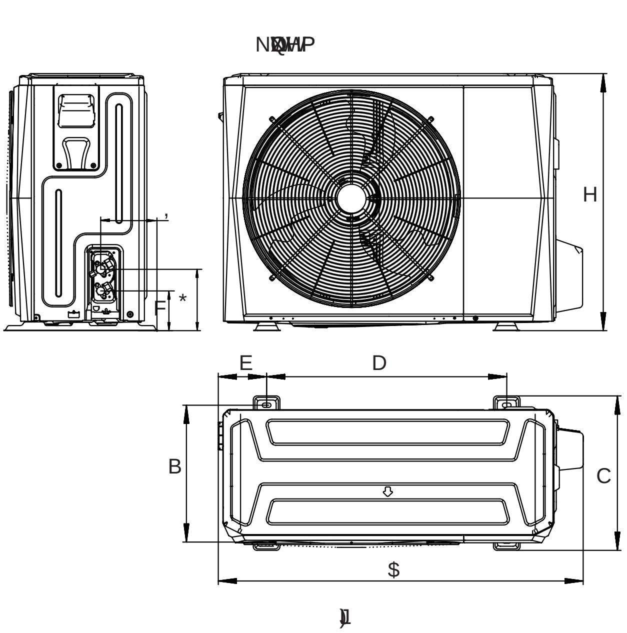

]L

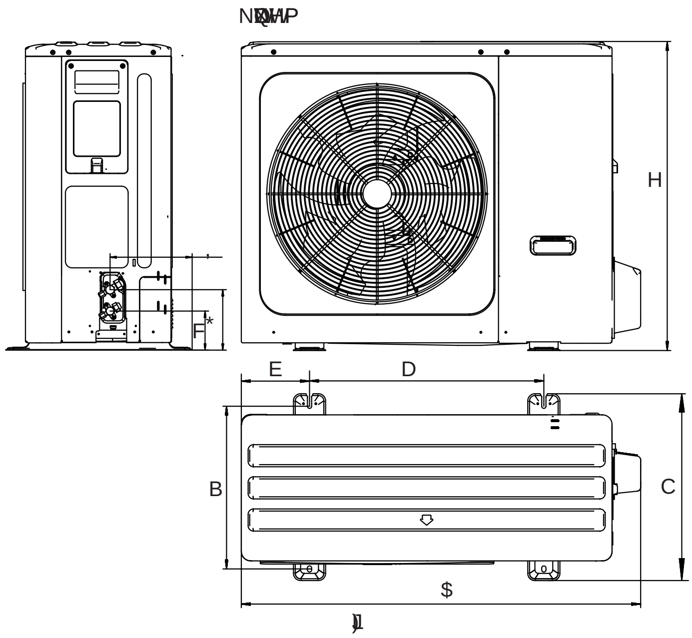

]L

		B	C	D	E	F	*	H	,
N:	1008					110	170	712	160
N:	1118			656	191	110	170	865	

&UHGHSQODUH

- 9HUEDLUHJVWHQ ISODEQDWD WUHXQKSQODUH DVWH ODQDWD V QURXEUDLVDJHQ XQL
-]DQDWFKVHXQHQ]DQHDXDEXMQXXEXOHSQHSHUDXX VHXWEXSOHEHSDVQ-FDUHVQSOHPHSD
-]QKDXEXOHQHSQQDOHVHSODVUDDDQHL

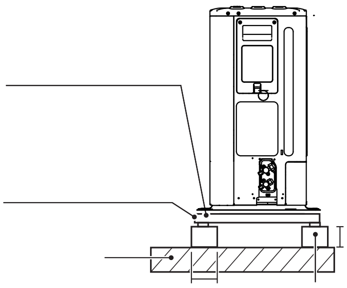

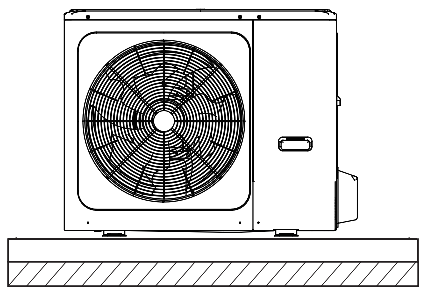

[illegible]

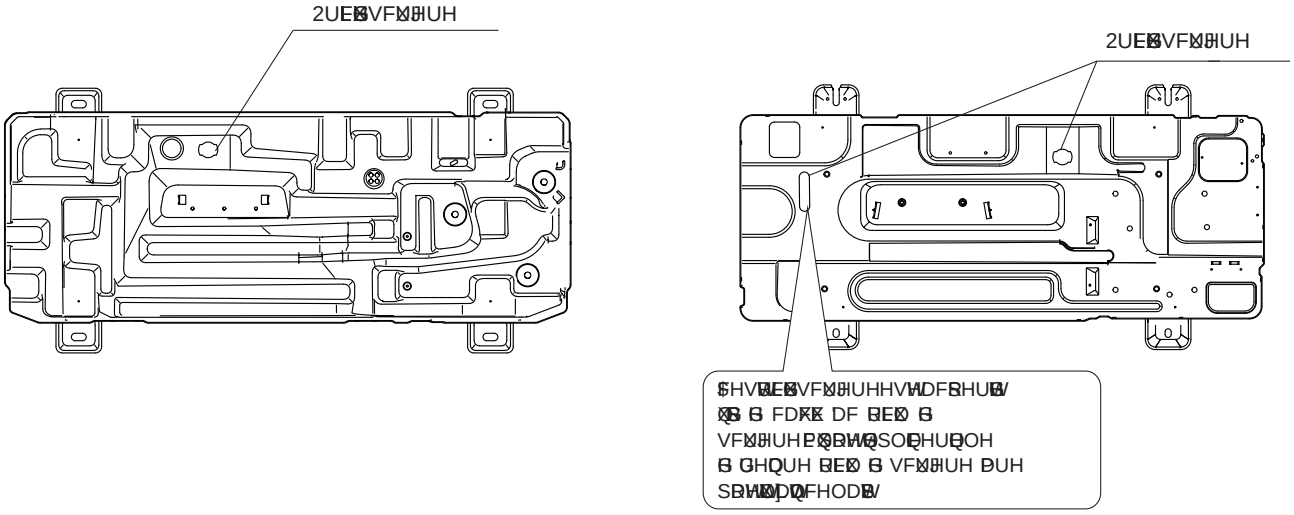

N:

N:

[illegible]

[illegible]

[illegible]

[illegible]

[illegible]

[illegible]

[illegible]

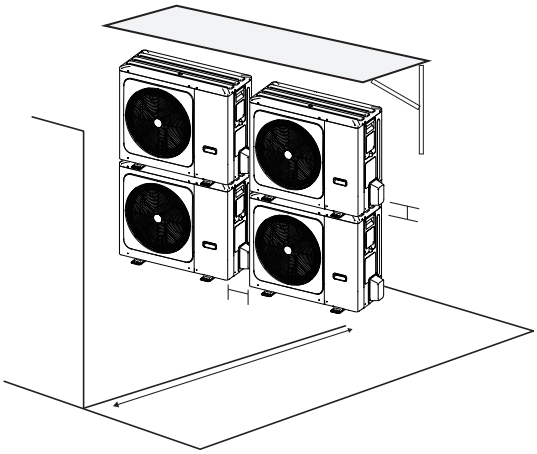

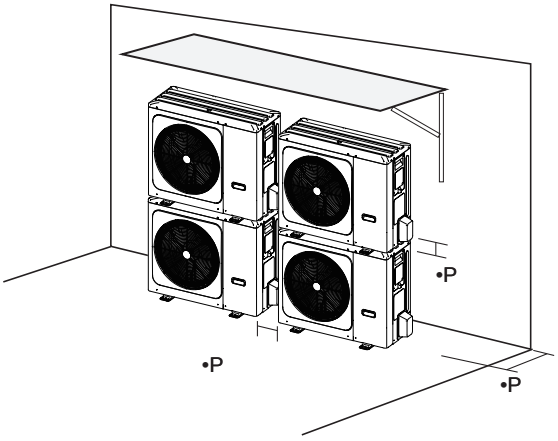

[illegible]

Unitate	
aN:	

127

[illegible]

[illegible]

[illegible]

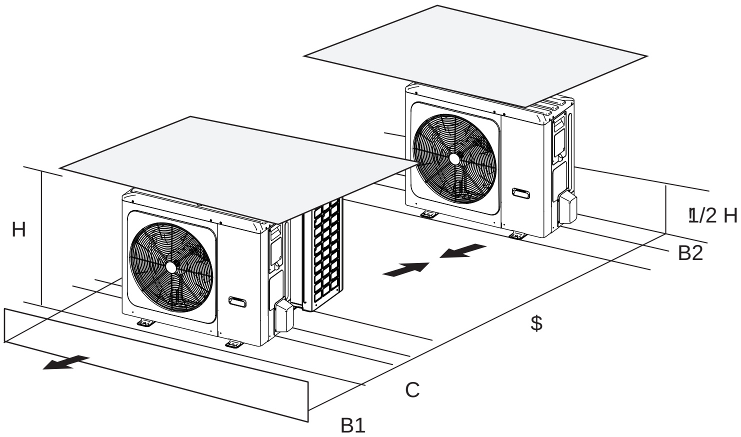

Unitate	$	P%	P%	&
aN:	•	•	•	•

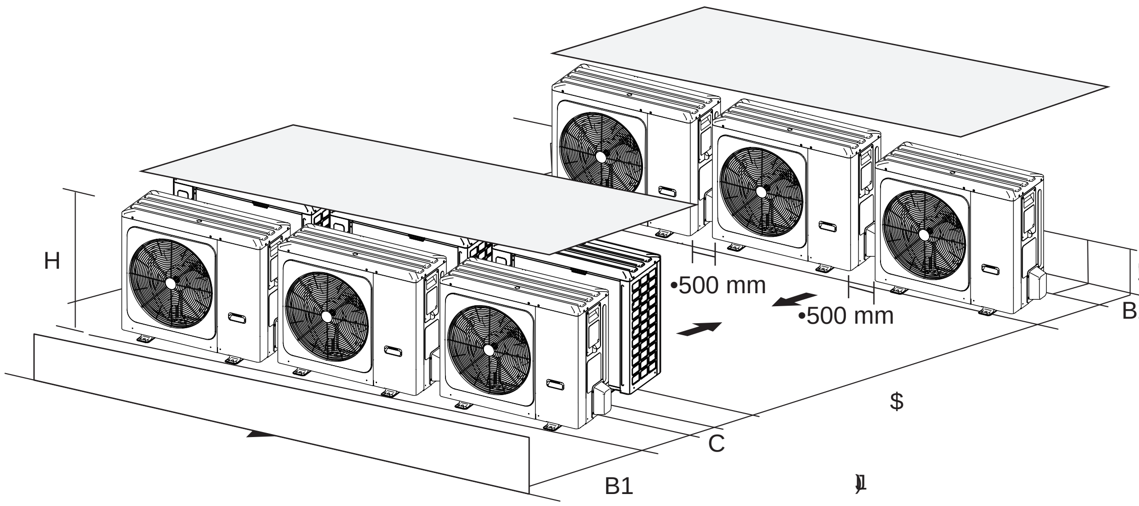

Unitate	$	P%	P%	&
aN:	•	•	•	•

,167$/$5($81,7Ă&,,(

7.1 RQWLQXLE

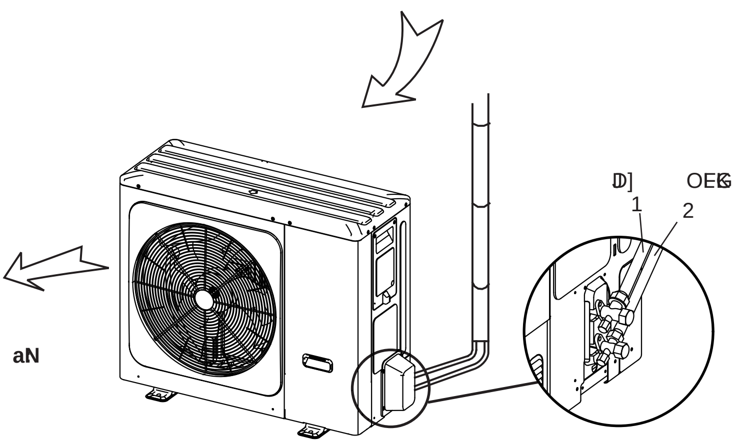

[illegible]

[illegible]

[illegible]

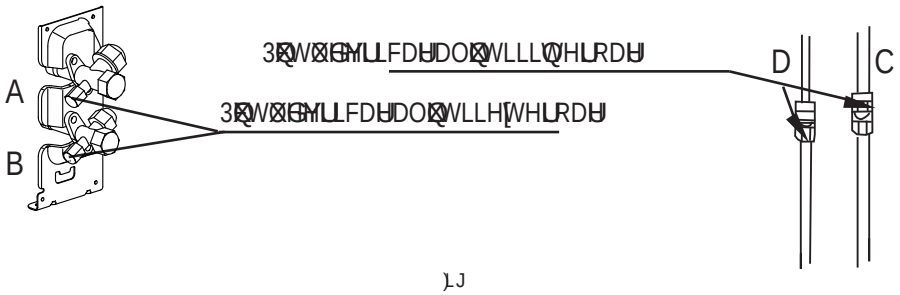
A
B
D
C

[illegible]

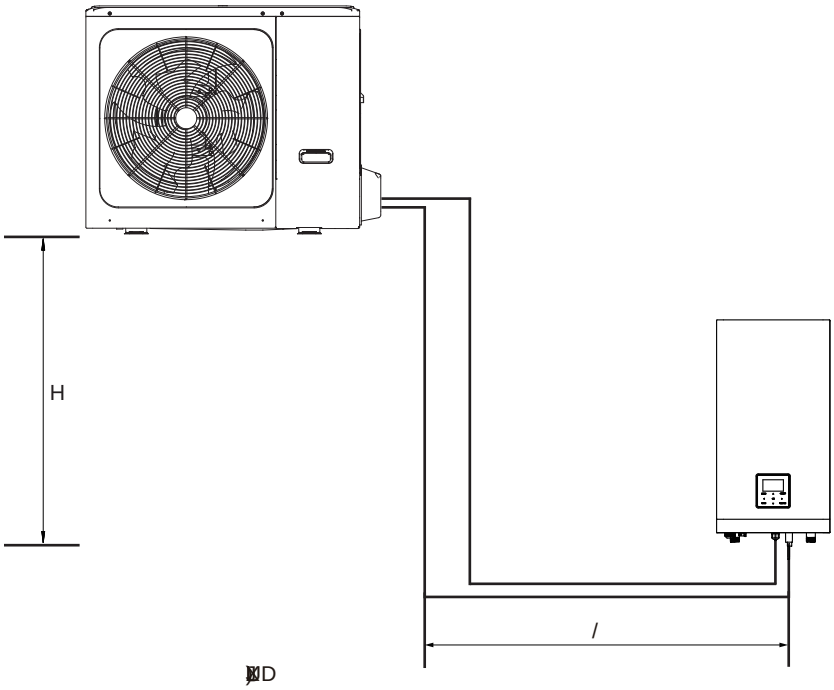

0HOV	a N
/DDDFKHL	0m
HUHDQQH+	20m

NRDW	5	--
NWDDW	5	--

	BUHDDXX	BUHDOEXX
8DWHUR HaN:	$HUHFXDFU	$HUHFXDFU
8DWHUR	$HUHFXDFU	$HUHFXDFU

[illegible]

[illegible]

[illegible]

[illegible]

[illegible]

[illegible]

[illegible]

[illegible]

[illegible]

[illegible]

[illegible]

[illegible]

[illegible]

[illegible]

[illegible]

[illegible]

[illegible]	[illegible]	[illegible]	
		≤15m	＞15m
[illegible]	/6 N	0J	/ -15 ×20J
	8/10/12/1 /16 N	0J	/ -15 × 8J

[illegible]

[illegible]

[illegible]

- [illegible]
- [illegible]

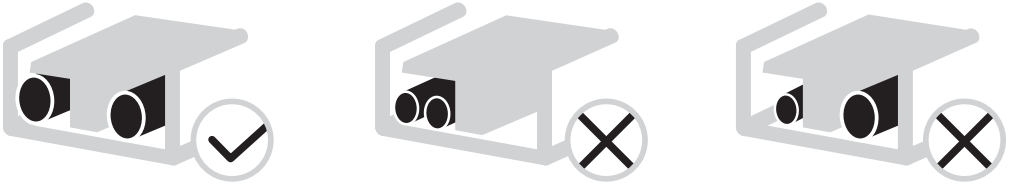

[illegible]

[illegible]

[illegible]

[illegible]

&XUHQWSURWHFWSHQWUXFXUHQ

6HOHFWDUHDFDEOXOXLGHDOLPHQWDUHFXUHQWXOXLFDUH DUHQWDSDELOEHLOXLODWWDEHOXL
FXHQWQRPLQDOWDEHOXOXLVHDEDWHDEHOXLQDOPDUHQWSHUWUXVHOHFWDUHDFDEOXOXL
VLVHOHFWDUHDHQWUXFXUHQWXOHIHFWLYDHOHQGDPHQWDOHSUREDEDUHD

6HOHFWDUHDPDMRUDUHSUHIHUHQWDSDUDUHDFDEOXOXLSHQWUXLQWUHUXSWRUXOGHFRQWDUHDFRQHFWDW
0SLVWHPDDLQWHUQLVHOHFWDGMDFDUHOHFWURQHWHUPRDUHOHFWURQHO

7DEHOXO

&XUHQWQRPLQDO DSDUDWXOXL	6HFWLXQHDQRPLQDOD PP²	
	&DEOXULHEH	&DEOXVHQWUXDFFHVRULL
”	L	L
>L ” 6	L	L
>L ” 10	L	L
>L ” 16	L	L
>L ” 25	L	L
>L ”	L	L
>L ” 50	L	L
>L ”	L	L

7DEHOXO

6LVWHP	8QLWDWHLQWHULRDUD				&RPSUHVRU			&RPSUHVRU		OFM	
	7HQVLXQH 9	+]	MiQ. 9	Max. 9	MCA $	TOCA $	MFA $	MSC $	R/ A $	KW	F/ A $
4kW			198		12	18	25	-			
6kW			198			18	25	-		0	
8kW			198		16	19	25	-			
10kW			198		17	19	25	-			
12kW			198		25			-			
14kW			198		26			-			
16kW			198		27			-			
N3					10		16	-			
N3					11		16	-			
N3					12		16	-			

127

0&$SHUDMDPFLUFXLW
TOCA:&XUHQWWRWDODVXSUDFXUHQW$
MFA:6LJXUDQWD
MSC:&XUHQWPD[LP
&XUHQWXOQRPLQDOSHQWUXUSRUQLUH
0RWRUXOYHQWLODWRUXOXL
KW:3XWHUHDQRPLQDODPRWRUXOXL
&XUHQWXOGHSOLQDVDUFLQD$

6FKHPDUHDFDSDFLWDWLLGHVWLQDWLH

Unitate	N	6N	8N	10N	12N	1 N	16N	12N -3H	1 N -3H	16N -3H
	18	18	19	19	0	0	0	1	1	1
&DEOXO FDEODMXOXL ²					6	6	6	2	2	2

‡9DORULOHGHFDOFXODUHVXQWREWLQXWHSHQWUXVHOHFWLDFDEOXOXLFRQYHQWLRQDOH

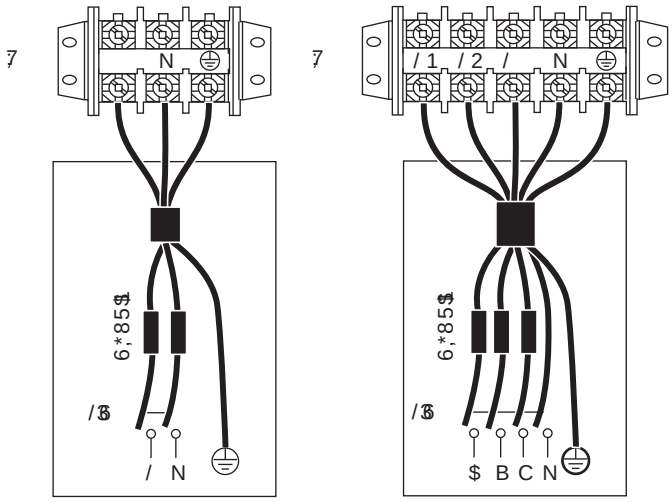

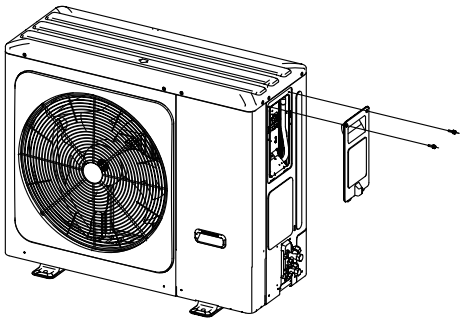

127

V

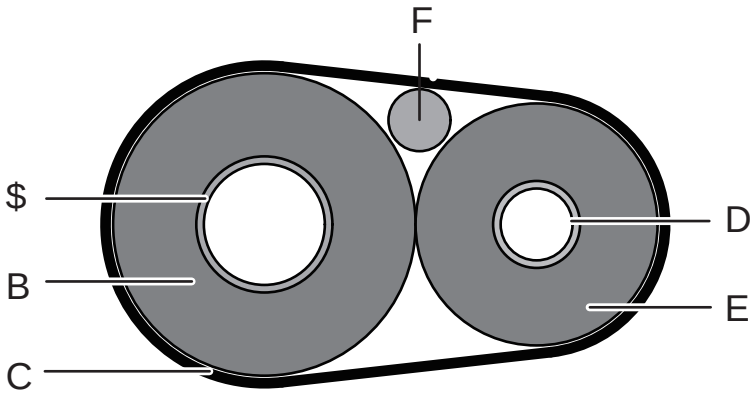

$	[illegible]
%	[illegible]
&	[illegible]
'	[illegible]
(	[illegible]
)	[illegible]

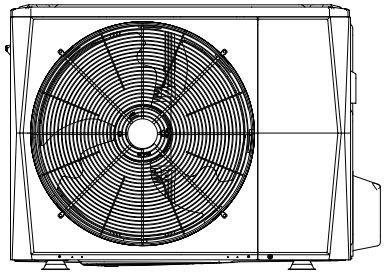

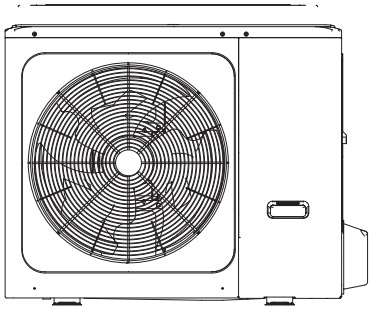

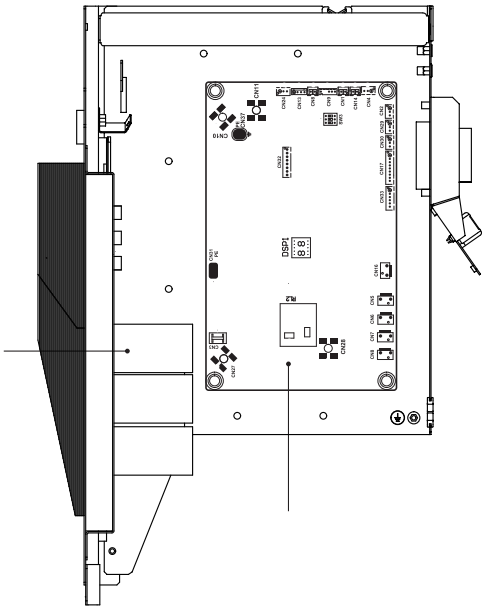

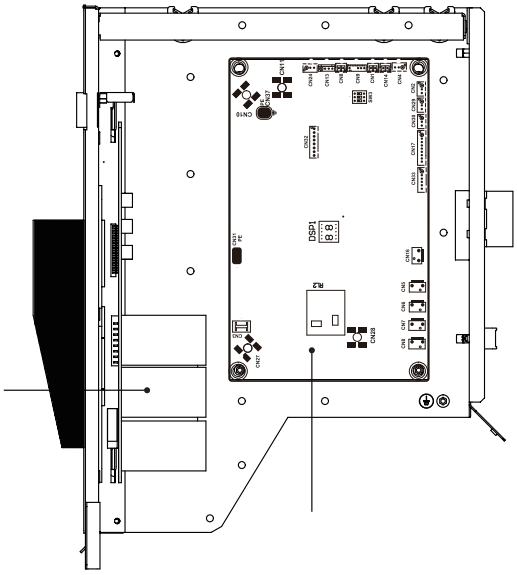

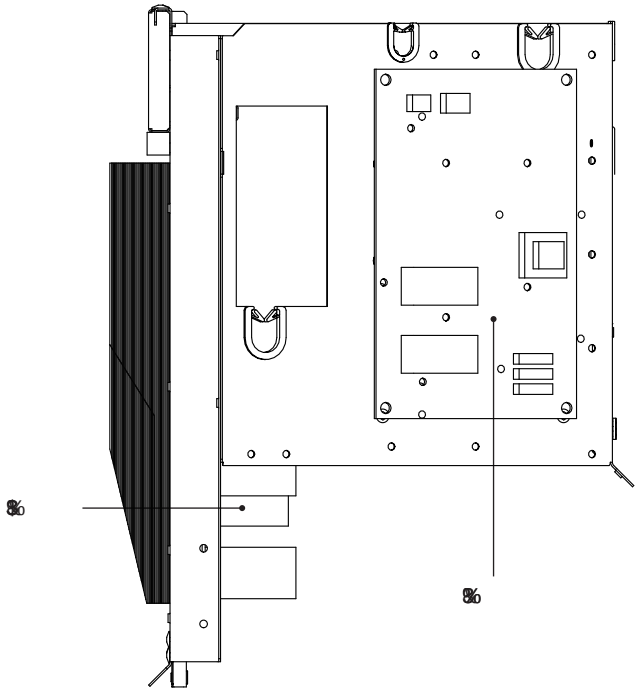

NQDW

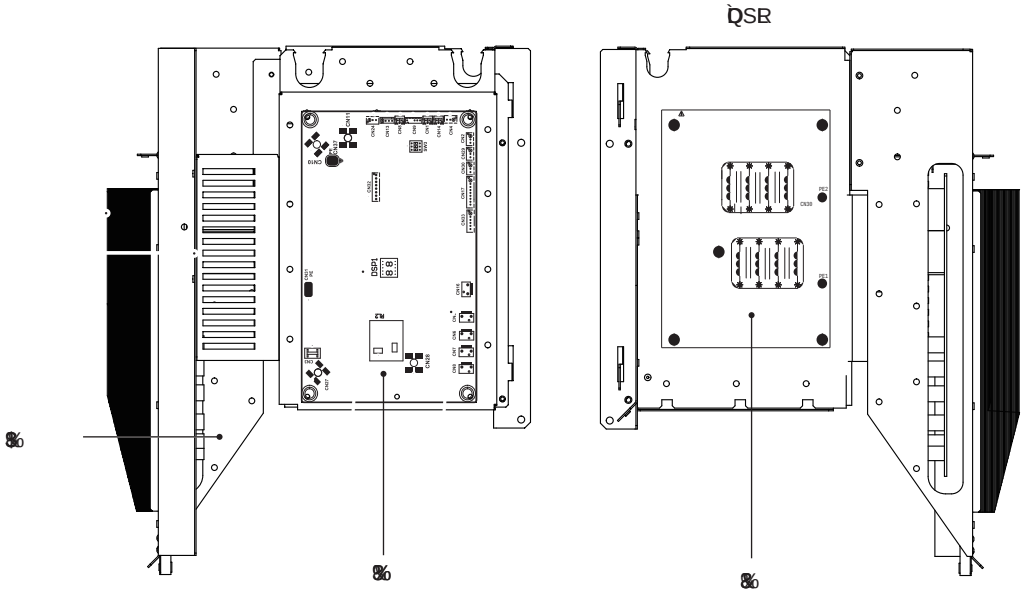

NWDW

127

PQDHVHGUSHQXHHUQRXDSUBXSUSUX

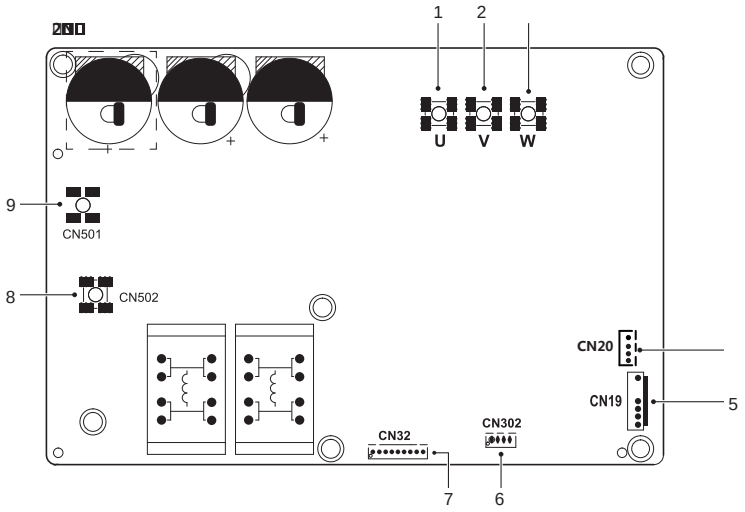

[illegible]	[illegible]	[illegible]	[illegible]
1	[illegible]	6	[illegible]
2	[illegible]	7	[illegible]
	[illegible]	8	[illegible]
	[illegible]	9	[illegible]
5	[illegible]	/	/

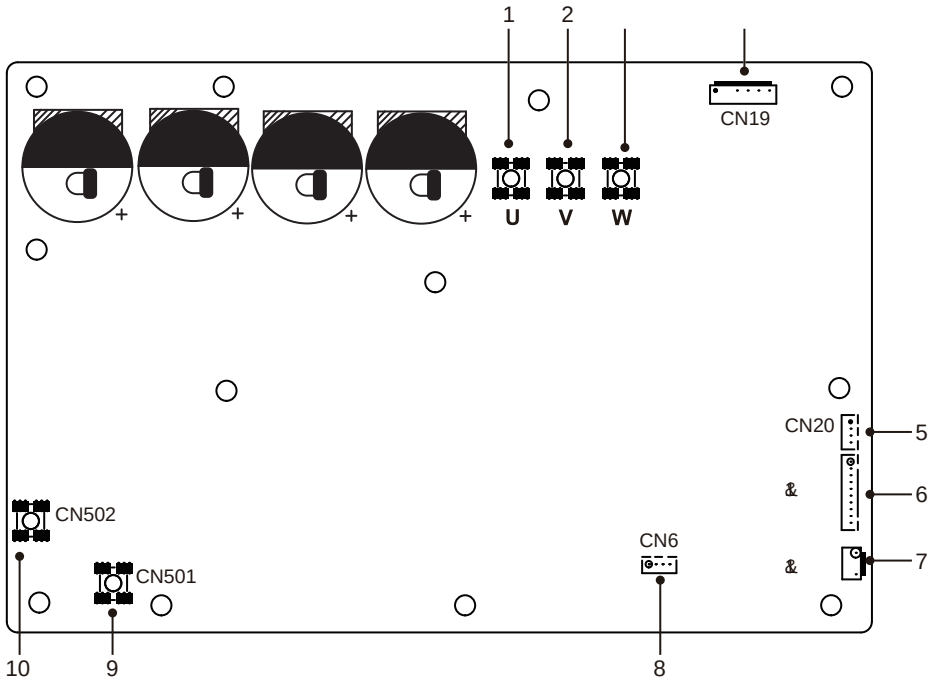

[illegible]	[illegible]	[illegible]	[illegible]
1	[illegible]	6	[illegible]
2	[illegible]	7	[illegible]
	[illegible]	8	[illegible]
	[illegible]	9	[illegible]
5	[illegible]	10	[illegible]

%SODFDGHFRQWUROSULQFLSDO

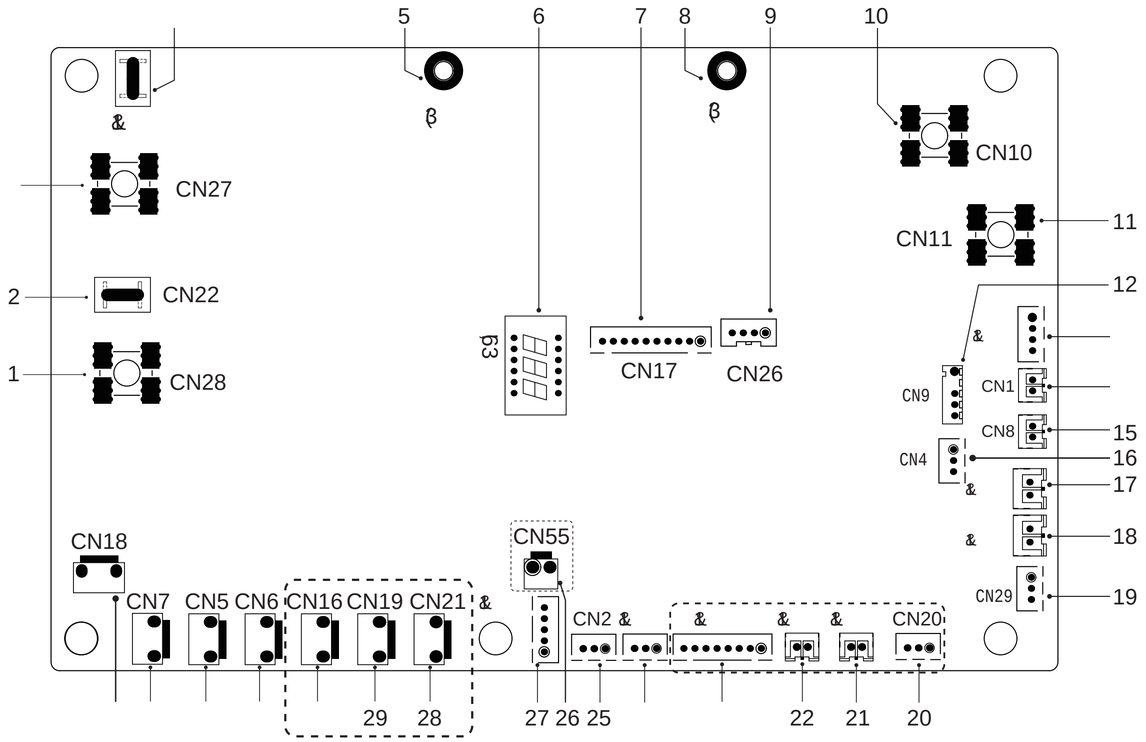

1ÚPHUR	8QLWHGDVDEODUH	1ÚPHUR	8QLWHGDVDEODUH
1	8QLGSHUH/OD&%	18	8SHQWKDQXSOMDVSUHVR&
2	5HJHUYDW	19	8SHQWKDQDUHFXSODFDGHFRQWUROPDLQD &
	8QLGSHUH1OD&%	20	5HJHUYDW
	5HJHUYDW	21	5HJHUYDW
5	8SHQXQXGRQDUHß	22	5HJHUYDW
6	$MDVO63		5HJHUYDW
7	8SHQWKDQDUHF&%		8SHQWKDQDUHUHJHUYDW
8	8SHQXQXGRQDUHß	25	8SHQWKDQDUHUHJHUYDW
9	5HJHUYDW	26	5HJHUYDW
10	8QDUHSHQXQL&	27	8SHQXSDSDGHSDQHOHFWL&
11	8QDUHSHQLVHQVRU&	28	5HJHUYDW
12	8SHQXHQXSDEHUQOGHUR VHQXSDFRQWDFXO&	29	5HJHUYDW
	8QDUHSHQX9&		8SHQWEDQSQOHHOHFWLEDVXL &RQO
	8SHQXHQXSODDVSUDUH&		8SHQXQFK&
15	8SHQXHQXSODHFDUH&		8SHQXQ69&
16	8SHQXHQXSUHVR&		8SHQWEDQSQOHHOHFWLEDFRUHVXK&
17	8SHQWKDQXSOOSUHVR&		8SHQWEDQSQOHHOHFWLEDFRUHVXK&

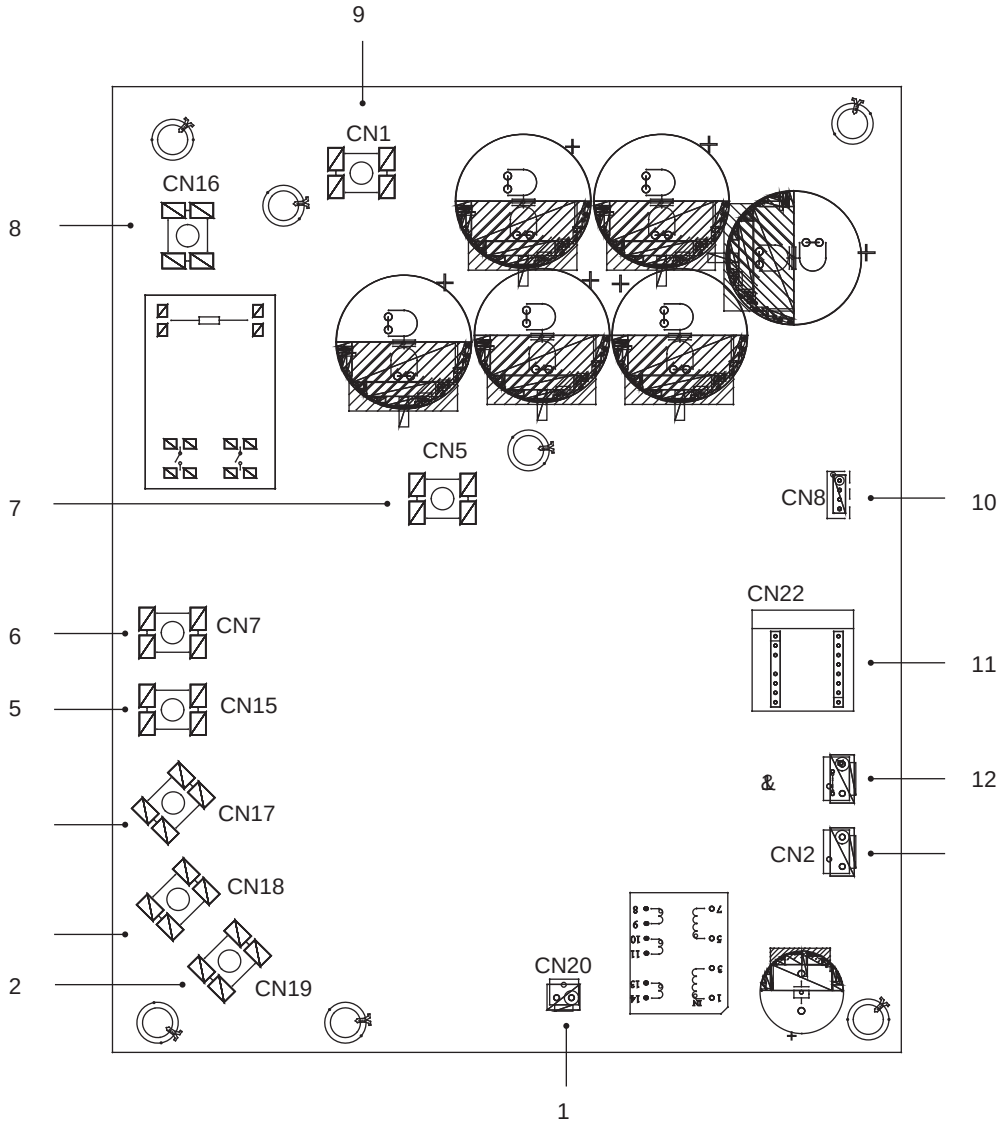

[illegible]	[illegible]	[illegible]	[illegible]
1		9	
2	[illegible]	10	[illegible]
		11	[illegible]
	[illegible]	12	[illegible]
5	[illegible]		[illegible]
6	[illegible]		
7			
8	[illegible]		

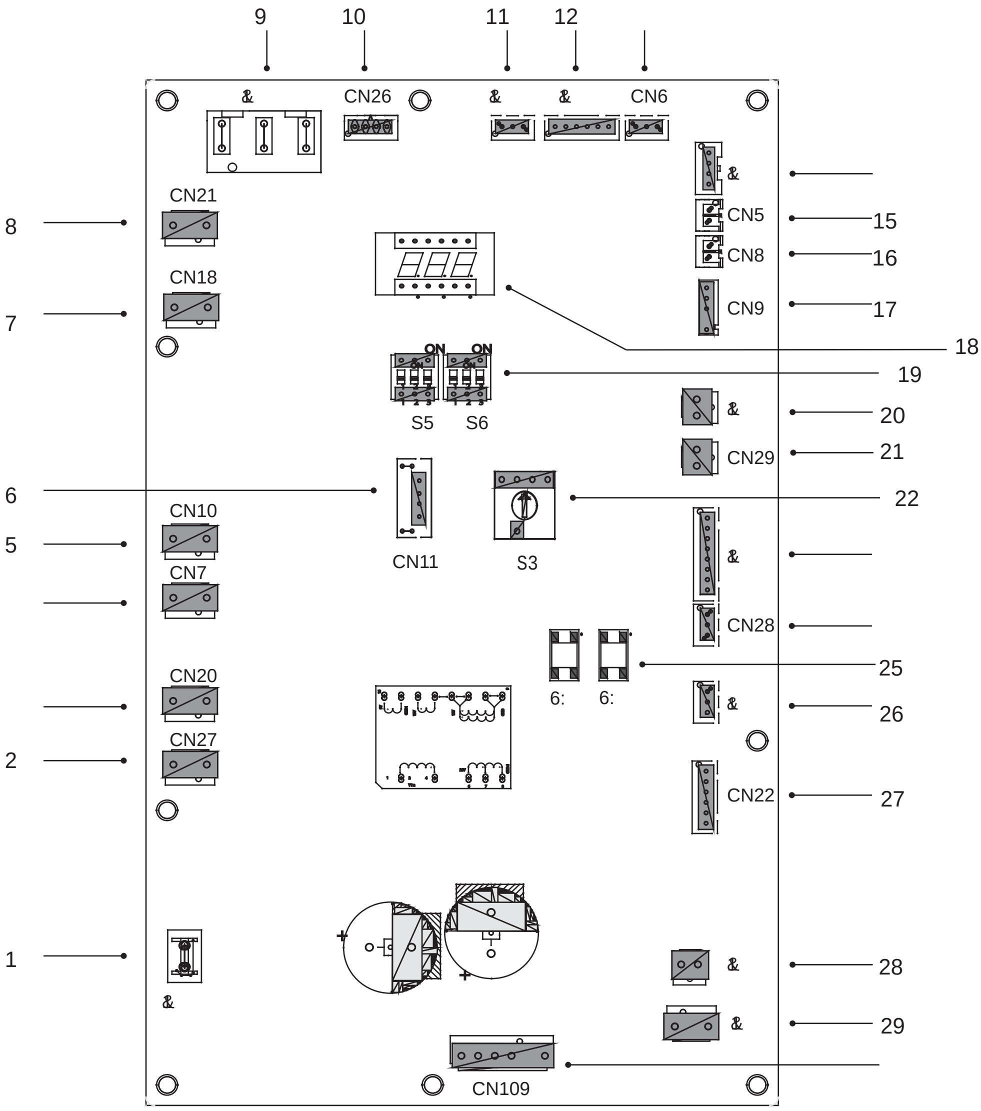

ȻRUH	8QLWVSDVDEODUH	ȻRUH	8QLWVSDVDEODUH
1	3ѴSHUQLXOGHSRUQLUH&	16	3ѴSHUWXHX]RQGHWHPSHUDWXUă7S&
2	3ѴSHUQLDQFKR&	17	3ѴSHUWXHX]RQGHWHPSHUDWXUăDPELHQWăOQ HWHULRUVHQ]RUGHWHPSHUDWXUDFRQGHQVDWRU&
	3ѴSHUQLDQFKR&	18	$MXVWDUH63
	3ѴSHUQLEDQGDQFRQWUROHOHFWULF&	19	0RG,66
5	3ѴSHUQLEDQGDQFRQWUROHOHFWULF&	20	3ѴSHUWXFRPXWDWRUXOGHMRDVSUHVLXQH&
6	5H]HUYDW	21	3ѴSHUWXFRPXWDWRUXOGHQDOWSUHVLXQHșLUHDUDUH UDSLG&
7	3ѴSHUQLDQFKR&	22	0RG,3DZ
8	5H]HUYDW		3ѴSHUWXHX]RQGHWHPSHUDWXUă7BWRQ 777&5H]HUYDW
9	3HGDOLPHQWDUHGLOD&		3ѴSHUWXFRQHFWDUH&
10	3ѴSHUWXFRQHFWDUHFDEOXOGHDOLPHQWDUH&	25	7DVWăSHQWUXFLUHDUDSLGăUDUH66
11	3ѴSHUWXFRQHFWDUHDXODFDGHFRQWURO GH]R	26	3ѴSHUWXFRQHFWDUH&
12	3ѴSHUWXFRQHFWDUH%	27	3ѴSHUWXSRPSDGHDSăEHOHFWULF&
	3ѴSHUWXHX]RQGHSUHVLXQH&	28	3ѴSHUQLDOLPHQWDUHDFXHQHUJLHHOHFWULFăDXOF&
	3ѴSHUWXFRQHFWDUH%	29	3ѴSHUQLDOLPHQWDUHDFXHQHUJLHHOHFWULFăDXOF&
15	3ѴSHUWXHX]RQGHWHPSHUDWXUă7&		3ѴSHUWXYHQWLODWRU&

[illegible]

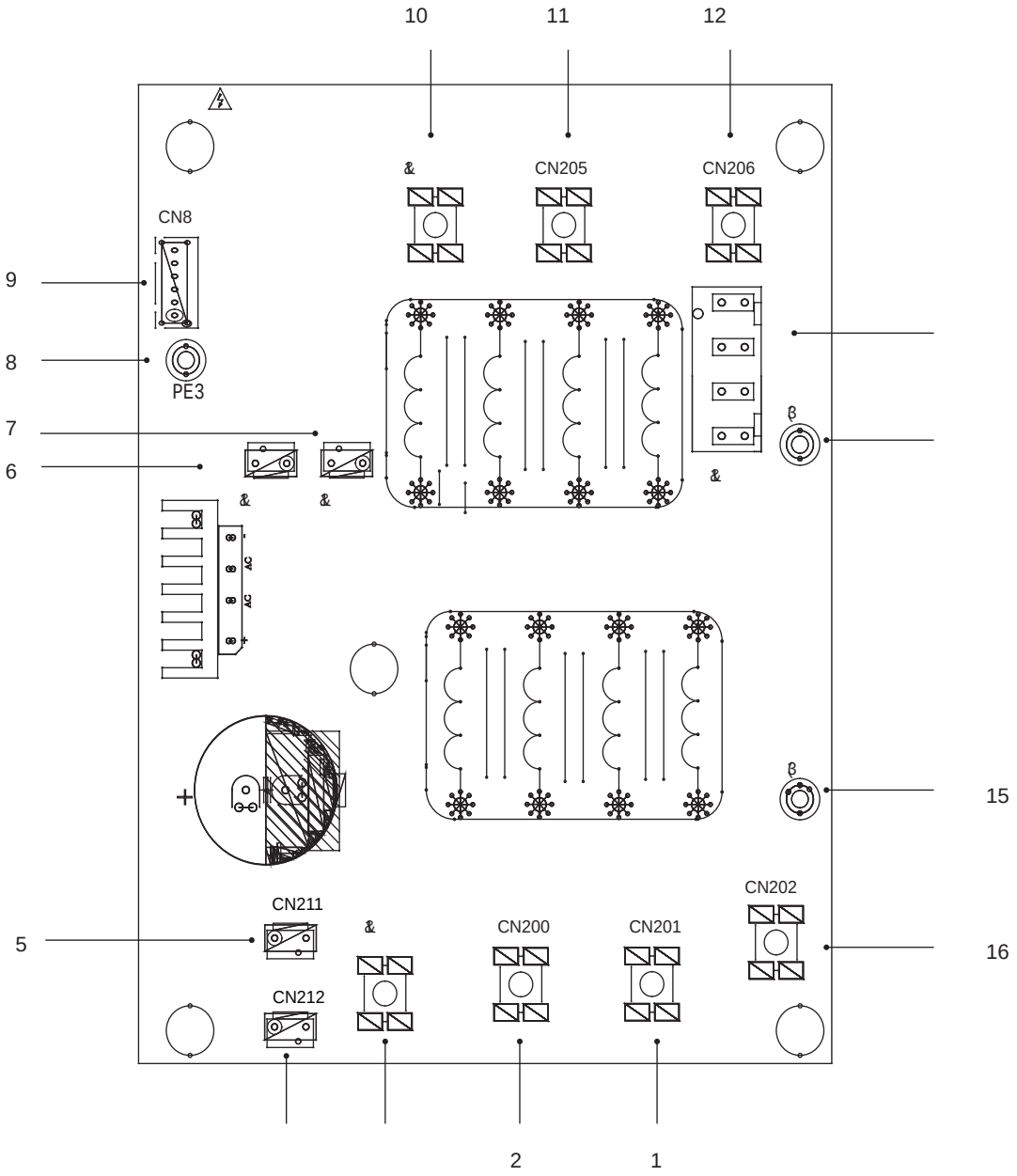

[illegible]

1	[illegible]	10	[illegible]
2	[illegible]	11	[illegible]
	[illegible]	12	[illegible]
	[illegible]		[illegible]
5	[illegible]		[illegible]
6	[illegible]	15	[illegible]
7	[illegible]	16	[illegible]
8	[illegible]		
9	[illegible]		

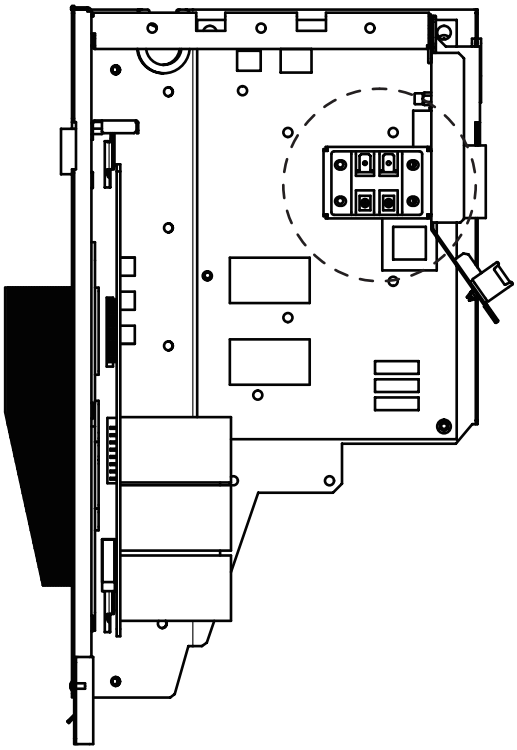

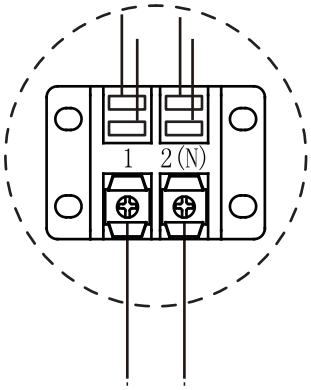
1
2(N)

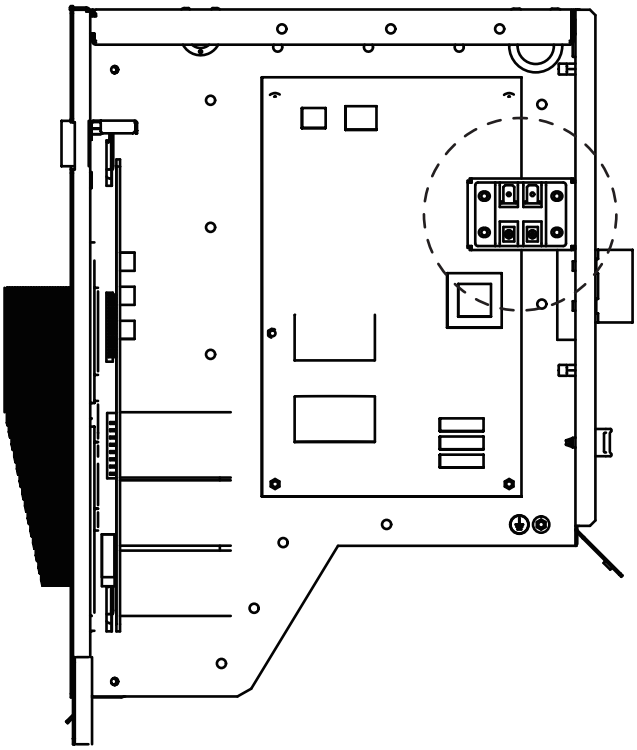

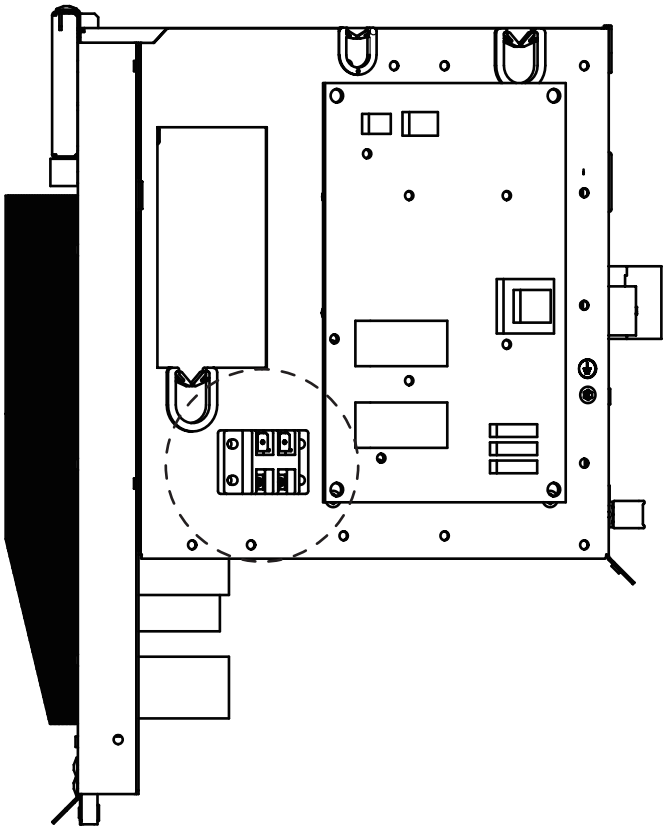

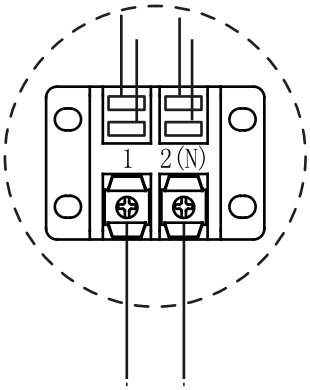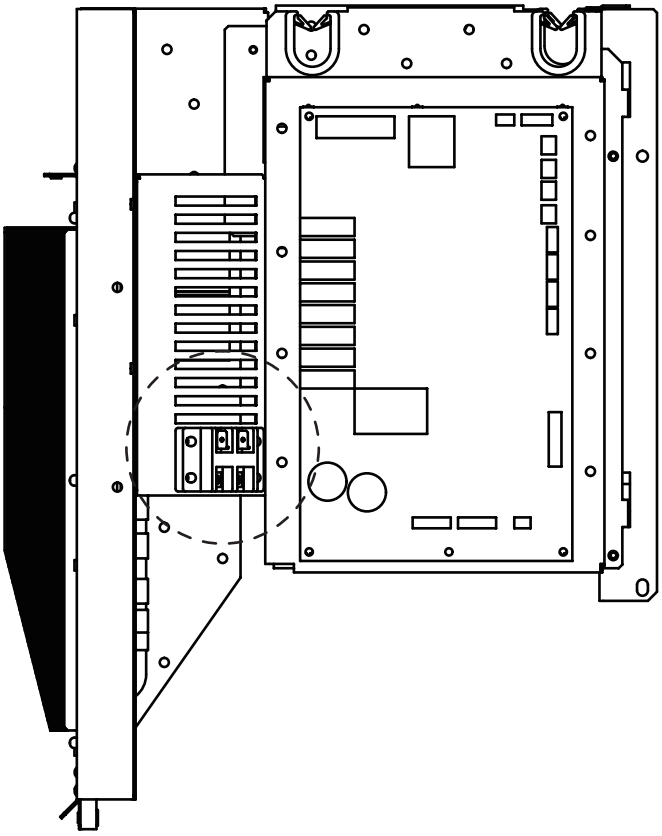
1
2(N)